Specifications

Item		Specification	
Master cylinder	Type	Tandem	
	Cylinder I.D.	22.22mm	
	Piston stroke	45±1 mm (1.77±0.039 in)	
	Fluid level switch	Provided	
Brake booster	Type	11" Single	
	Boosting ratio	9:1	
Front Disc brake	Type	2WD	4WD
		Ventilated disc	Ventilated disc
	Disc O.D.	Ø 280 mm (11.02 in)	Ø 300 mm (11.81 in)
	Disc thickness	26 mm (1.02 in)	28 mm (1.10 in)
	Caliper piston	Single	Single
	Cylinder I.D.	Ø 57.2mm (2.25 in)	Ø 60.6mm (2.39 in)
Rear brake	Type	2WD	4WD
		Solid disc	Solid disc
	Disc O.D.	262 mm (10.31 in)	Ø 284 mm (11.18 in)
	Disc thickness	10 mm (0.39 in)	10 mm (0.39 in)
	Caliper piston	Single	Single
	Cylinder I.D.	Ø 34 mm(1.34 in)	Ø 34 mm (1.34 in)
Parking brake	Type	2WD	4WD
		DIH (Drum in hat)	DIH (Drum in hat)
	Drum I.D.	Ø 168 mm (6.61 in)	Ø 190 mm (7.48 in)

NOTE

O.D. : Outer Diameter
I.D : Inner Diameter

Specification(ESC)

Part	Item	Standard value		Remark
HECU	System	4 Channel 4 Sensor (Solenoid)		Total control (ABS, EBD, TCS, ESC)
	Type	Motor, valve relay intergrated type		
	Operating Voltage	10 ~ 16 V		
	Operating Temperature	-40 ~ 120 °C (-40 ~ 248°F)		
	Motor power	270 W		
Active Wheel speed sensor	Supply voltage	DC 4.5 ~ 20 V		
	Output current low	5.9 ~ 8.4 mA		
	Output current high	11.8~ 16.8 mA		
	Output range	1 ~ 2500 Hz		
	Tone wheel	Front	48 teeth	
		Rear	2WD : 47 teeth, 4WD : 48 teeth	
	Air gap	Front	0.4 ~ 1.5 mm	
		Rear	2WD : 0.4 ~ 1.5mm, 4WD : 0.4 ~ 1.0mm	
Steering Wheel Angle Sensor	Operating Voltage	8 ~ 16 V		
	Current Consumption	Max. 150 mA		
	Output measurement range	-780 ~ +779.9 °		
	Operating Angular velocity	0 ~ 1016 °/sec		
Yaw rate& Lateral & Longitudinal G sensor	Operating Voltage	10 V ~ 16 V		
	Current Consumption	Max. 140 mA		
	Yaw rate sensor measurement	-75 ~ +75 °/sec		

mcx30.com

	Lateral and Longitudinal G sensor measurement range	-1.5 +1.5g	

Service Standard

Items	Standard vale
Brake pedal height	165 mm (6.50 in)
Brake pedal Full stroke	135 mm (5.31 in)
Stop lamp clearance	1.5 ~ 2.0 mm (0.06 ~ 0.08 in)
Brake pedal free play	3 ~ 8 mm (0.12 ~ 0.31 in)
Front brake disc thickness	2WD : 26 mm (1.02 in), 4WD : 28 mm (1.10 in),
Front brake disc pad thickness	11 mm (0.43 in)
Rear brake disc thickness	10 mm (0.39 in)
Rear brake disc pad thickness	10 mm (0.39 in)

Tightening Torques

Items	N.m	kgf.m	lb-ft
Hub nut	88.3 ~ 107.9	9.0 ~ 11.0	65.1 ~ 79.6
Master cylinder to brake booster	7.9 ~ 11.8	0.8 ~ 1.2	5.8 ~ 8.7
Brake booster mounting nuts	16.7 ~ 25.5	1.7 ~ 2.6	12.3 ~ 18.8
Air bleeding screw	6.9 ~ 12.7	0.7 ~ 1.3	5.1 ~ 9.4
Brake tube flare nuts	12.7 ~ 16.7	1.3 ~ 1.7	9.4 ~ 12.3
Front caliper guide rod bolts	21.6 ~ 31.4	2.2 ~ 3.2	15.9 ~ 23.1
Rear caliper guide rod bolts	21.6 ~ 31.4	2.2 ~ 3.2	15.9 ~ 23.1
Front caliper assembly to knuckle	78.5 ~ 98.1	8.0 ~ 10.0	57.9 ~ 72.3
Rear caliper assembly to knuckle	78.5 ~ 98.1	8.0 ~ 10.0	57.9 ~ 72.3
Brake hose to caliper	24.5 ~ 29.4	2.5 ~ 3.0	18.1 ~ 21.7
Brake pedal member bracket bolts	16.7 ~ 25.5	1.7 ~ 2.6	12.3 ~ 18.8
Brake pedal shaft nut	24.5 ~ 34.3	2.5 ~ 3.5	18.1 ~ 25.3
Stop lamp switch lock nut	11.8 ~ 14.7	1.2 ~ 1.5	8.7 ~ 10.8
Front wheel speed sensor mounting bolt	6.9 ~ 10.8	0.7 ~ 1.1	5.0 ~ 8.0
HECU bracket mounting bolt and nut	16.7 ~ 25.5	1.7 ~ 2.6	12.3 ~ 18.8
Yaw rate&G sensor mounting bolts	7.9 ~ 10.8	0.8 ~ 1.1	5.8 ~ 8.0

Lubricants

Items	Recommended	Quantity
Brake fluid	DOT 3 or DOT 4	As required
Brake pedal bushing and bolt	Chassis grease	As required
Parking brake shoe and backing plate contacting surface	Heat resistance grease	As required
Caliper guide rod and boot	AI-11P	0.8 ~ 2.0g

Brake System > General Information > Special Service Tools

Special Service Tools

Tool(Number and Name)	Illustration	Use
09581-11000 Piston expander	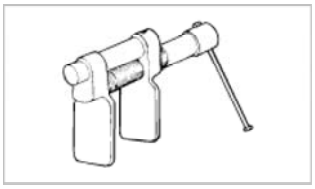	Spreading the front disc brake piston.

Brake System > General Information > Troubleshooting

mcx30.com

Problem Symptoms Table

Use the table below to help you find the cause of the problem. The numbers indicate the priority of the like cause of the problem. Check each part in order.
If necessary, replace these parts.

Symptom	Suspect Area	Reference
Lower pedal or spongy pedal	1. Brake system (Fluid leaks) 2. Brake system (Air in) 3. Piston seals (Worn or damaged) 4. Rear brake shoe clearance(Out of adjustment) 5. Master cylinder (Inoperative)	repair air·bleed replace adjust replace
Brake drag	1. Brake pedal free play (Minimum) 2. Parking brake lever travel (Out of adjustment) 3. Parking brake wire (Sticking) 4. Rear brake shoe clearance(Out of adjustment) 5. Pad or lining (Cracked or distorted) 6. Piston (Stuck) 7. Piston (Frozen) 8. Anchor or Return spring (Inoperative) 9. Booster system (Vacuum leaks) 10. Master cylinder (Inoperative)	adjust adjust repair adjust replace replace replace replace repair replace
Brake pull	1. Piston (Sticking) 2. Pad or lining (Oily) 3. Piston (Frozen) 4. Disc (Scored) 5. Pad or lining (Cracked or distorted)	replace replace replace replace replace
Hard pedal but brake inefficient	1. Brake system (Fluid leaks) 2. Brake system (Air in) 3. Pad or lining (Worn) 4. Pad or lining (Cracked or distorted) 5. Rear brake shoe clearance(Out of adjustment) 6. Pad or lining (Oily) 7. Pad or lining (Glazed) 8. Disc (Scored) 9. Booster system (Vacuum leaks)	repair air·bleed replace replace adjust adjust replace replace repair
Noise from brake	1. Pad or lining (Cracked or distorted) 2. Installation bolt (Loosen) 3. Disc (Scored) 4. Sliding pin (Worn) 5. Pad or lining (Dirty) 6. Pad or lining (Glazed) 7. Anchor or Return spring (Faulty) 8. Brake pad shim (Damage) 9. Shoe hold-down spring (Damage)	replace adjust replace replace clean replace replace replace replace
Brake fades	1. Master cylinder (Inoperative)	replace
Brake vibration, pulsation	1. Brake booster (Vacuum leaks) 2. Pedal free play 3. Master cylinder (Inoperative) 4. Caliper (Damage) 5. Master cylinder cap seal 6. Damaged brake lines	replace adjust replace replace replace replace
Brake Chatter	Brake chatter is usually caused by loose or worn components, or glazed or burnt linings. Rotors with hard spots can also contribute to brake chatter. Additional causes of chatter are out-of-tolerance rotors, brake lining not securely attached to the shoes, loose wheel bearings and contaminated brake lining.	

Brake System > Brake System > Repair procedures

Operation and Leakage Check

Check all of the following items:

Component	Procedure
Brake Booster (A)	Check brake operation by applying the brakes during a test drive. If the brakes do not work properly, check the brake booster. Replace the brake booster as an assembly if it does not work properly or if there are signs of leakage.
Piston cup and pressure cup inspection (B)	• Check brake operation by applying the brakes. Look for damage or signs of fluid leakage. Replace the master cylinder as an assembly if the pedal does not work properly or if there is damage or signs of fluid

mcx30.com

	• Check for a difference in brake pedal stroke between quick and slow brake applications. Replace the master cylinder if there is a difference in pedal stroke.
Brake hoses (C)	Look for damage or signs of fluid leakage. Replace the brake hose with a new one if it is damaged or leaking.
Caliper piston seal and piston boots (D)	Check brake operation by applying the brakes. Look for damage or signs of fluid leakage. If the pedal does not work properly, the brakes drag, or there is damage or signs of fluid leakage, disassemble and inspect the brake caliper. Replace the boots and seals with new ones whenever the brake caliper is disassembled.

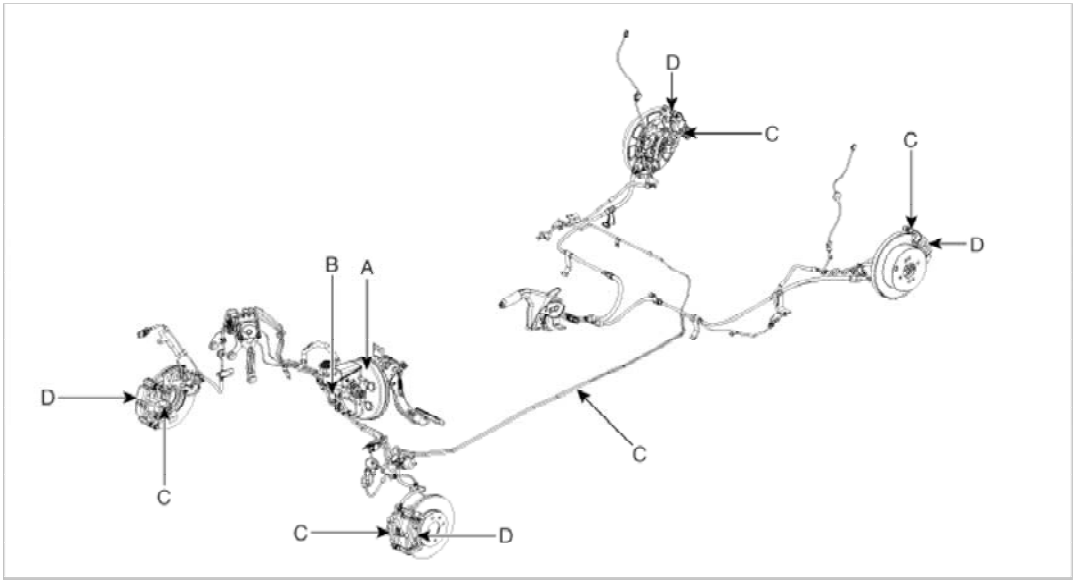

Brake System Bleeding

CAUTION

- Do not reuse the drained fluid.
- Always use genuine DOT3/DOT4 brake Fluid.
  Using a non-genuine DOT3/DOT4 brake fluid can cause corrosion and decrease the life of the system.
- Make sure no dirt or other foreign matter is allowed to contaminate the brake fluid.
- Do not spill brake fluid on the vehicle, it may damage the paint; if brake fluid does contact the paint, wash it off immediately with water.
- The reservoir on the master cylinder must be at the MAX (upper) level mark at the start of bleeding procedure and checked after bleeding each brake caliper. Add fluid as required.

1. Make sure the brake fluid in the reservoir is at the MAX(upper) level line.
2. Have someone slowly pump the brake pedal several times, and then apply pressure.
3. Loosen the right-rear brake bleed screw (A) to allow air to escape from the system. Then tighten the bleed screw securely.

Front

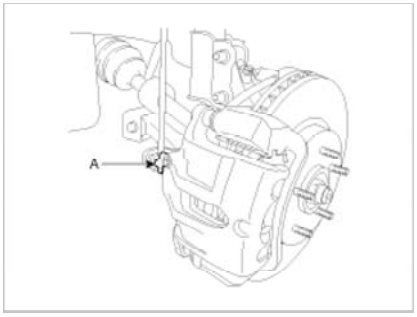

Rear

mcx30.com

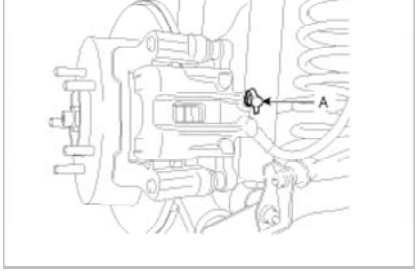

4. Repeat the procedure for wheel in the sequence shown below until air bubbles no longer appear in the fluid.

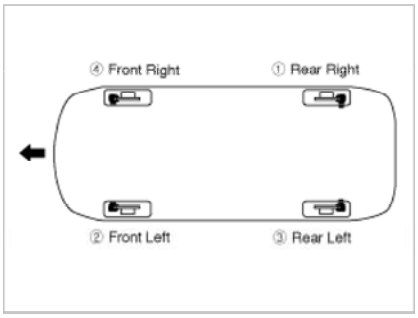

5. Refill the master cylinder reservoir to MAX(upper) level line.

Brake System > Brake System > Brake Booster > Components and Components Location

Components

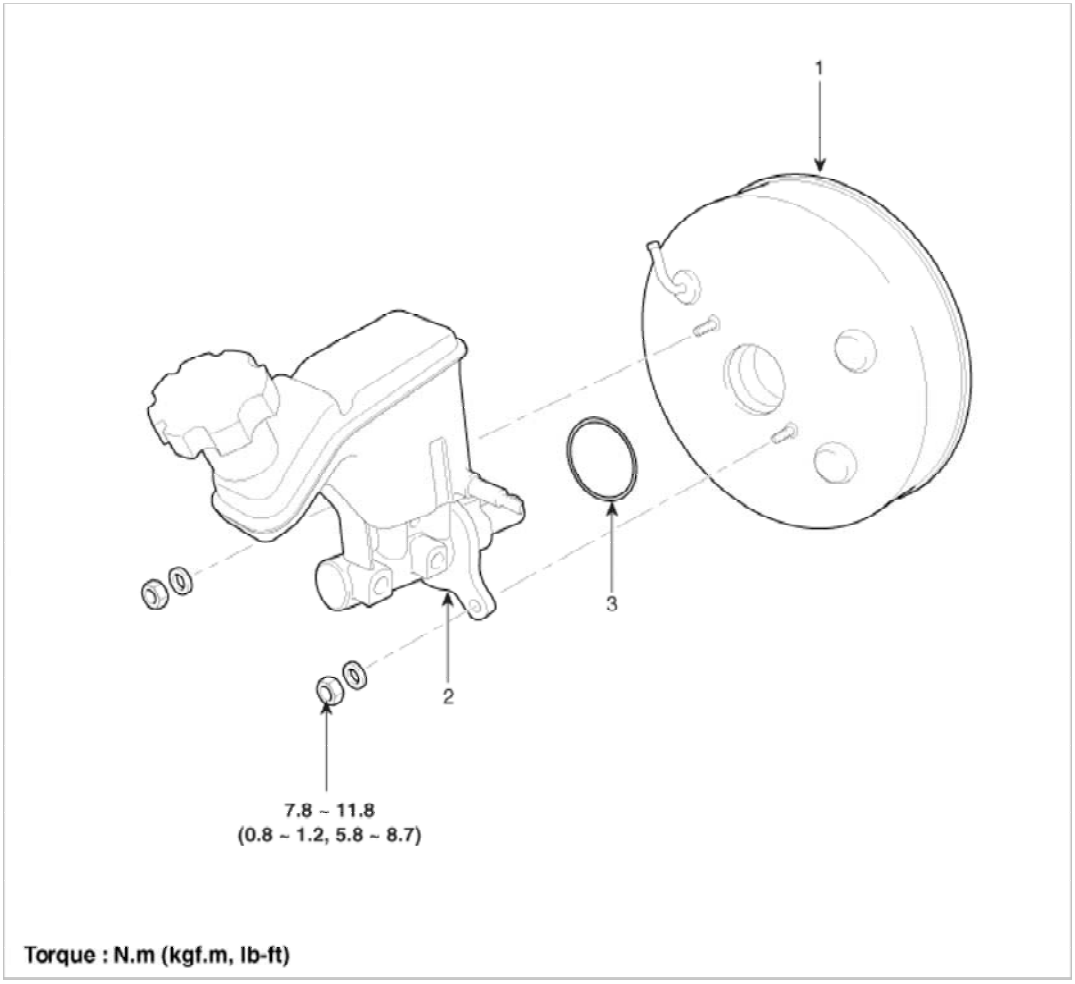

1. Brake booster 2. Master cylinder assembly	3. O-ring

mcx30.com

Brake Booster Operating Test

For simple checking of the brake booster operation, carry out the following tests.

1. Run the engine for one or two minutes, and then stop it. If the pedal depresses fully the first time but gradually becomes higher when depressed succeeding times, the booster is operating properly, if the pedal height remains unchanged, the booster is inoperative.

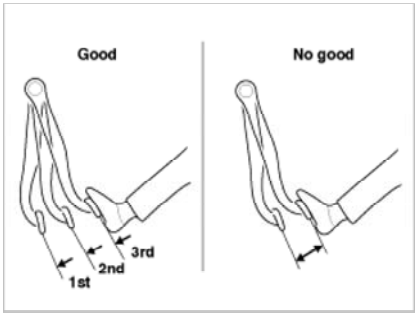

2. With the engine stopped, step on the brake pedal several times.
   Then step on the brake pedal and start the engine. If the pedal moves downward slightly, the booster is in good condition. If there is no change, the booster is inoperative.

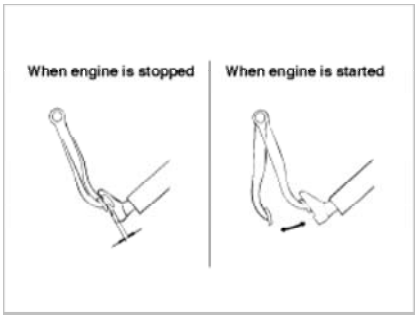

3. With the engine running, step on the brake pedal and then stop the engine.Hold the pedal depressed for 30 seconds. If the pedal height does not change, the booster is in good condition, if the pedal rises, the booster is inoperative.
   If the above three tests are okay, the booster performance can be determined as good.
   Even if one of the above three tests is not okay, check the check valve, vacuum hose and booster for malfunction.

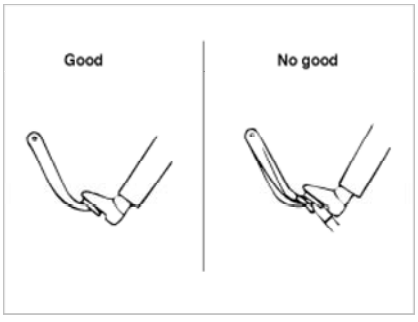

Removal

1. Turn ignition switch OFF and disconnect the negative (-) battery cable.
2. Disconnect the battery positive terminal and then remove the battery.
3. Disconnect the ECM connector and then ECM and battery tray.
4. Disconnect the vacuum hose (A) from the brake booster.

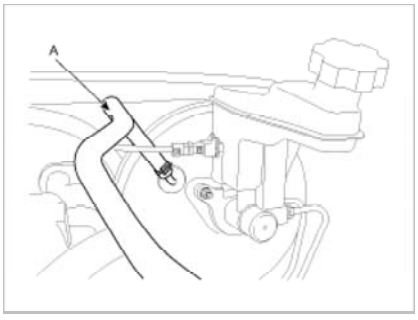

5. Remove the master cylinder. (Refer to Master cylinder)
6. Remove the snap pin (A) and clevis pin (B).

mcx30.com

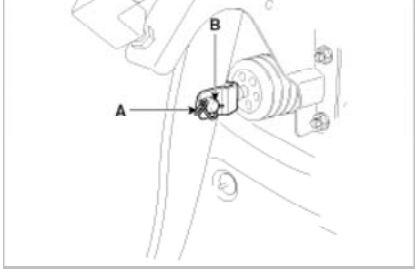

7. Remove the mounting nuts.

Tightening torque:
16.7 ~ 25.5 N.m (1.7 ~ 2.6 kgf.m, 12.3 ~ 18.8 lb-ft)

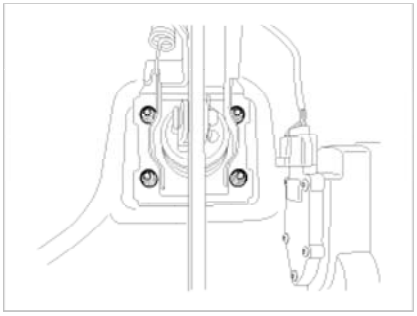

8. Remove the brake booster.

Inspection

1. Inspect the check valve in the vacuum hose.

> CAUTION
>
> Do not remove the check valve from the vacuum hose.

2. Check the boot for damage.

Installation

1. Installation is the reverse of removal.

> CAUTION
>
> • Before installing the pin, apply the grease to the joint pin.
> • Use a new snap pin whenever installing.

2. Adjust the brake pedal height and free play.
   (Refer to Brake pedal height and free play adjustment)
3. After installing, bleed the brake system. (Refer to Brake system bleeding)

Brake System > Brake System > Master Cylinder > Components and Components Location

Components

mcx30.com

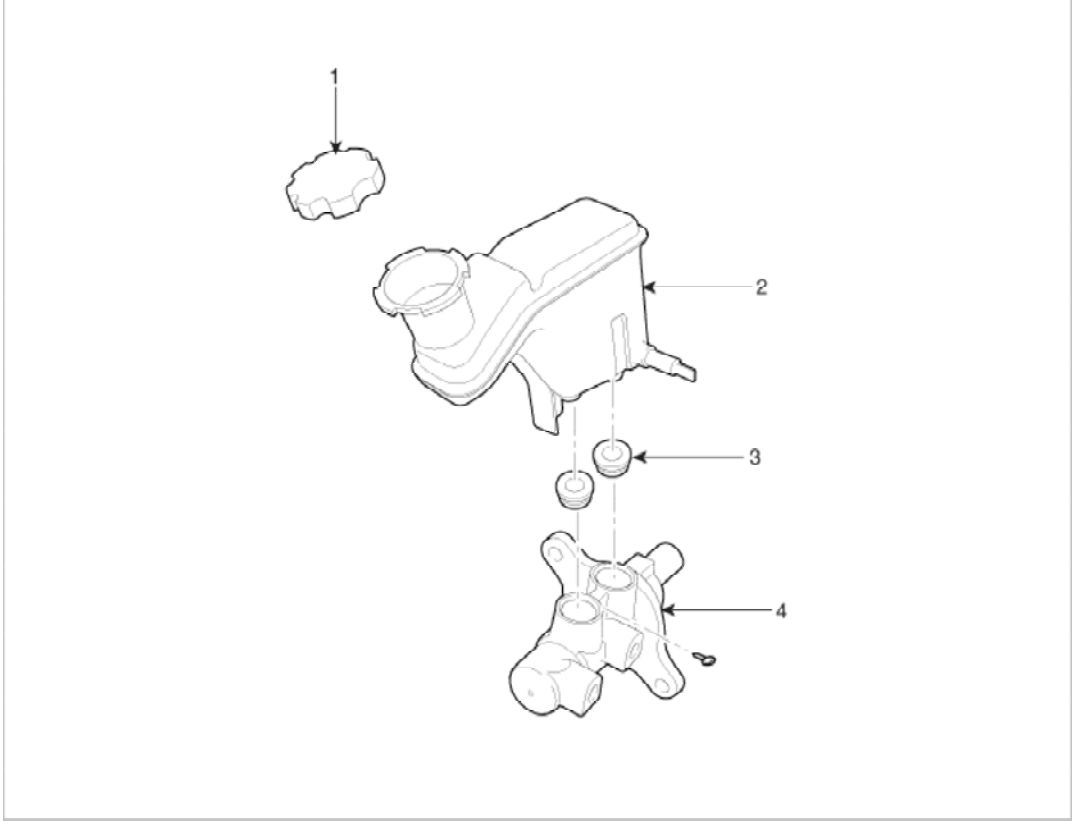

1. Reservoir cap 2. Reservoir	3. Grommet 4. Master cylinder

Brake System > Brake System > Master Cylinder > Repair procedures

Removal

1. Turm ignition switch OFF and disconnect the negative (-) battery cable.
2. Disconnect the battery positive terminal and them remove the battery.
3. Disconnect the ECM connector and the ECM and battery tray.
4. Disconnect the brake fluid level switch connector (A), and remove the reservoir cap.

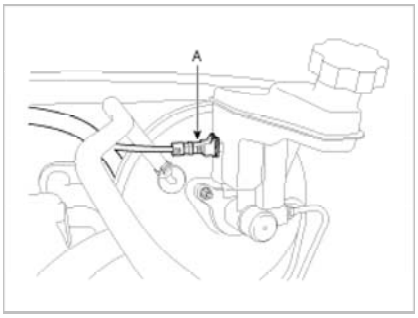

5. Remove the brake fluid from the master cylinder reservoir with a syringe.

> CAUTION
>
> • Do not spill brake fluid on the vehicle, it may damage the paint; if brake fluid does contact the paint, wash it off immediately with water.

6. Disconnect the brake tube (A) from the master cylinder by loosening the tube flare nut.

Tightening torque:
18.6 ~ 22.6N.m (1.9 ~ 2.3kgf.m, 13.7 ~ 16.6lb-ft)

mcx30.com

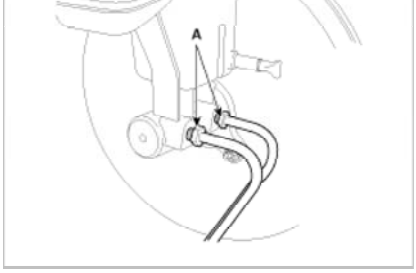

7. Remove the master cylinder (B) from the brake booster after loosening the mounting nuts (A).

Tightening torque:
7.9 ~ 11.8N.m (0.8 ~ 1.2kgf.m, 5.8 ~ 8.7lb-ft)

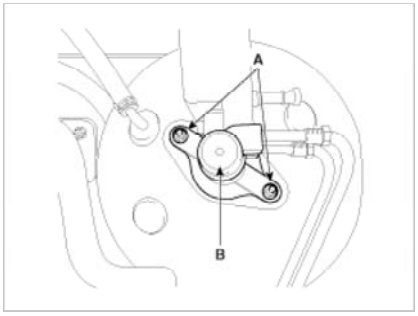

Installation

1. Installation is the reverse of removal.
2. After installation, bleed the brake system. (Refer to Brake system bleeding)

Brake System > Brake System > Brake Line > Components and Components Location

Components

mcx30.com

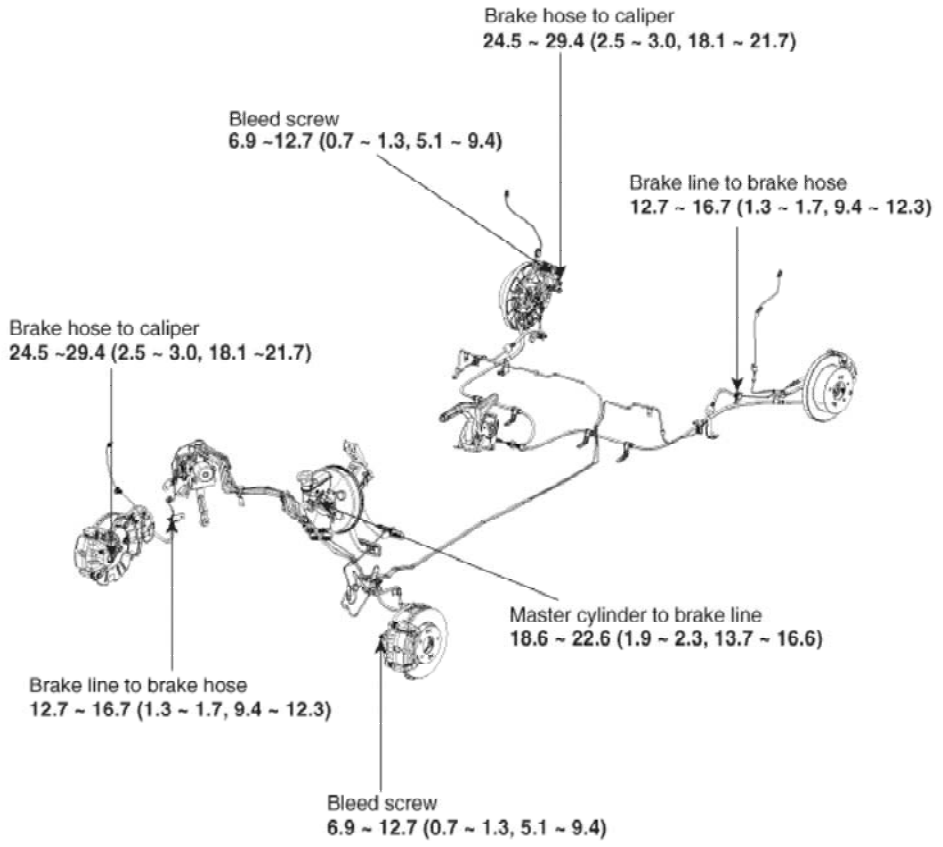

Torque : Nm (kgf.m, lb-ft)

Brake System > Brake System > Brake Line > Repair procedures

Removal

1. Disconnect the brake fiuid level switch connector, and remove the reservoir cap.
2. Remove the brake fluid from the master cylinder reservior with a syringe.

> CAUTION
>
> Do not spill brake fluid on the vehicle, it may damage the paint; if brake fluid does contact the paint, wash it off immediately with water.

3. Remove the wheel & tire.
4. Remove the brake hose clip (A).

Front

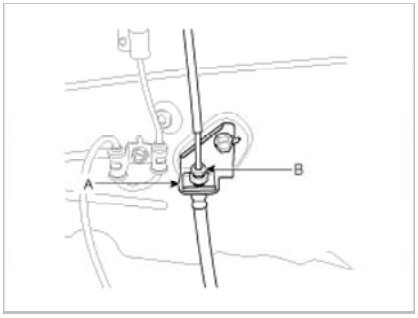

Rear

mcx30.com

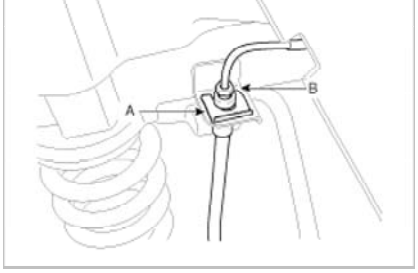

5. Disconnect the brake tube by loosening the tube flare nut (B).

Tightening torque:
12.7 ~16.7 N.m (1.3 ~1.7 kgf.m, 9.4 ~12.3 lb-ft)

6. Disconnect the brake hose from the brake caliper by loosening the bolt (C).

Tightening torque:
24.5 ~29.4 N.m (2.5 ~3.0 kgf.m, 18.1 ~21.7 lb-ft)

Front

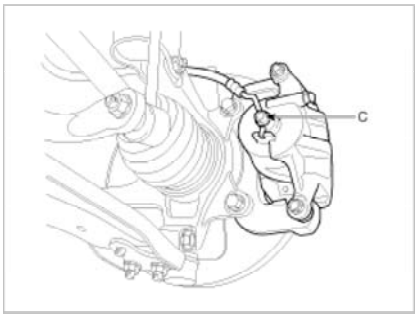

Rear

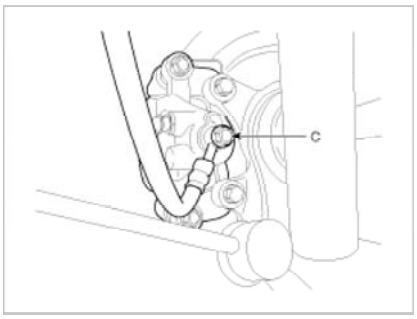

Inspection

1. Check the brake tubes for cracks, crimps and corrosion.
2. Check the brake hoses for cracks, damage and fluid leakage.
3. Check the brake tube flare nuts for damage and fluid leakage.
4. Check brake hose mounting bracket for crack or deformation.

Installation

1. Installation is the reverse of removal.

CAUTION

Use a new washer (A) whenever installing.

mcx30.com

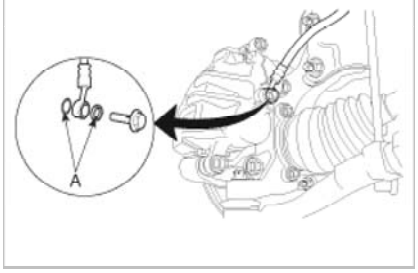

2. After installation, bleed the brake system. (Refer to Brake system bleeding)
3. Check the spilled brake oil.

Brake System > Brake System > Brake Pedal > Components and Components Location

Components

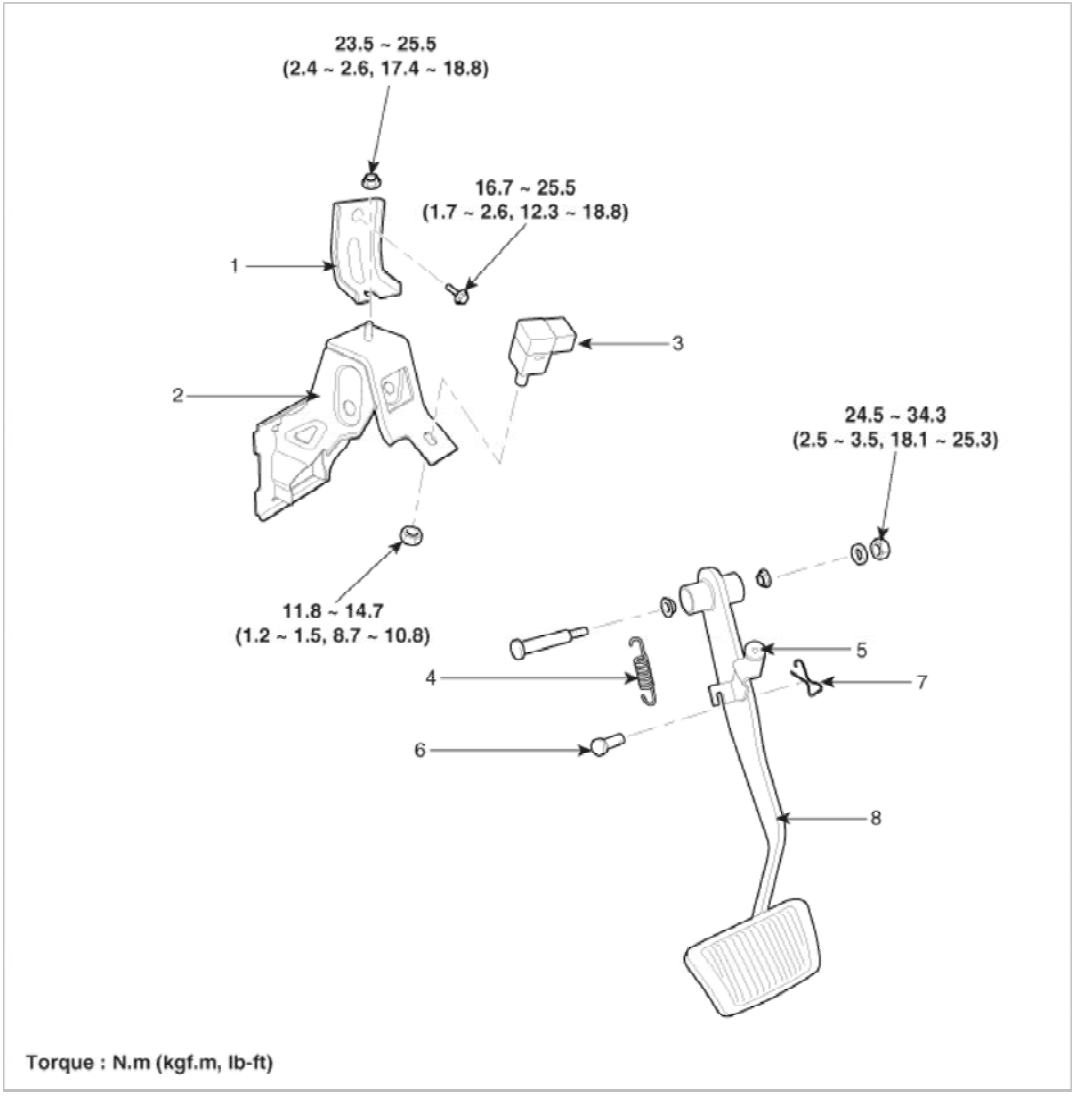

1. Cowl bracket 2. Brake pedal member assembly 3. Stop lamp switch 4. Return spring	5. Brake pedal stopper 6. Clevis pin 7. Snap pin 8. Brake pedal

Brake System > Brake System > Brake Pedal > Repair procedures

Removal

1. Remove the crash pad lower panel. (Refer to the Body group- crash pad).

mcx30.com

3. Disconnect the stop lamp switch connector (A).

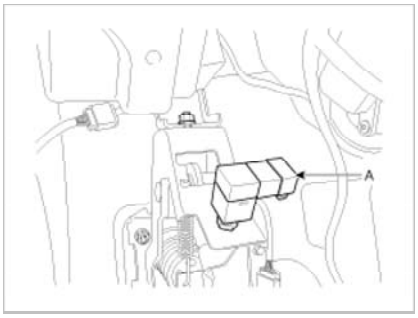

4. Remove the brake pedal member mounting nut (A).

Tightening torque:
16.5 ~ 25.5 N.m (1.7 ~ 2.6 kgf.m, 12.3 ~ 18.8 lb-ft)

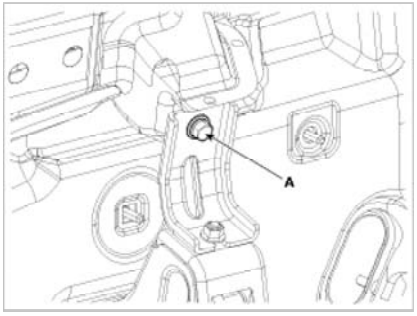

5. Remove the snap pin (A) and clevis pin (B).

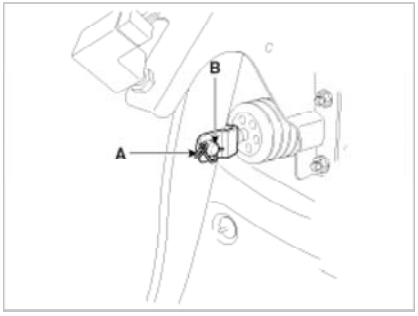

6. Remove the brake pedal member assembly mounting nuts and then remove the brake pedal assembly.

Tightening torque:
16.7 ~ 25.5 N.m (1.7 ~2.6 kgf.m, 12.3 ~ 18.8 lb-ft)

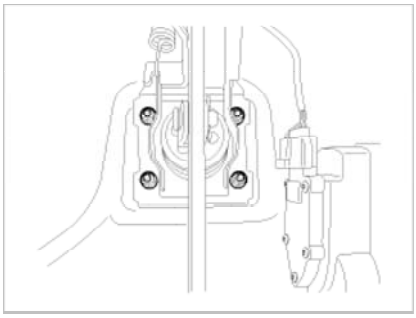

Inspection

1. Check the bushing for wear.
2. Check the brake pedal for bending or twisting.
3. Check the brake pedal return spring for damage.
4. Check the stop lamp switch.
   (1) Connect a circuit tester to the connector of stop lamp switch, and check whether or not there is continuity when the plunger of the stop lamp switch is pushed in and when it is released.
   (2) The stop lamp switch is in good condition if there is no continuity when plunger(A) is pushed.

mcx30.com

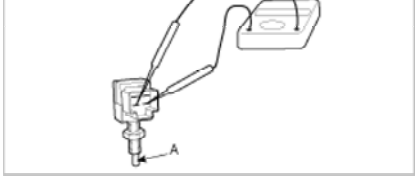

Adjustment

Brake Pedal Height and Free Play

1. Disconnect the stop lamp switch connector (A) and loosen the stop lamp switch lock nut.

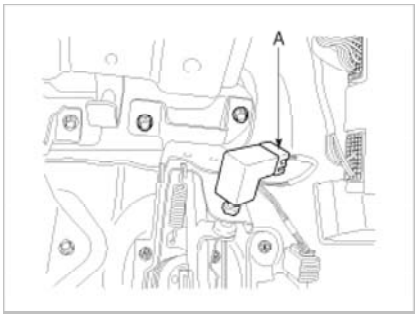

2. Adjust the brake pedal height (A) as illustration below.

Pedal height (A) : 165 mm (6.50 in)
Full stroke : 135 mm (5.31 in)

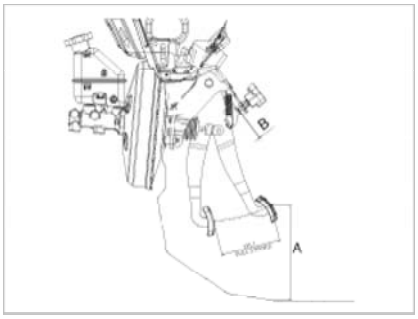

3. Adjust the stop lamp switch clearance (B) and brake pedal free play.

Stop lamp clearance: 1.5 ~ 2.0 mm (0.06 ~ 0.08 in)
Pedal free play: 3.0 ~ 8.0 mm (0.12 ~ 0.31 in)

4. Connect the stop lamp switch connector.

Installation

1. Installation is the reverse of removal.

CAUTION

- Before installing the pin, apply the grease to the clevis pin.
- Use a new snap pin whenever installing.

2. Adjust the brake pedal height and free play.
3. Check the brake pedal operation.

Brake System > Brake System > Front Disc Brake > Components and Components Location

Components

mcx30.com

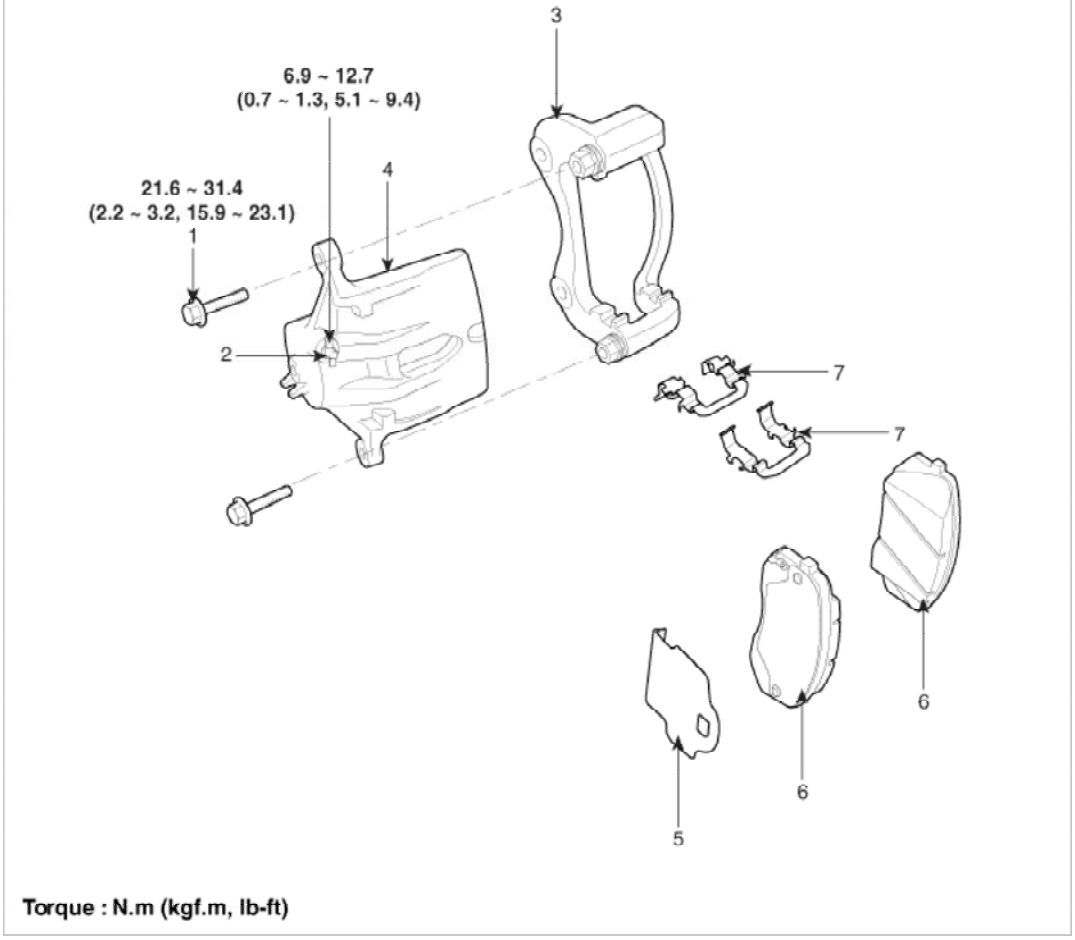

1. Guide rod bolt 2. Bleed screw 3. Caliper bracket 4. Caliper body	5. Inner pad shim 6. Brake pad 7. Pad retainer

Brake System > Brake System > Front Disc Brake > Repair procedures

Removal

1. Remove the front wheel & tire.

Tightening torque:
88.3 ~107.9 N.m (9.0 ~11.0 kgf.m, 65.1 ~79.6 lb-ft)

2. Loosen the hose eyebolt (B) and caliper mounting bolts (C), then remove the front caliper assembly (A).

Tightening torque:
Brake hose to caliper(B):
24.5 ~29.4 N.m (2.5 ~3.0 kgf.m, 18.1 ~21.7 lb-ft)
Caliper assembly to knuckle(C):
78.5 ~98.1 N.m (8.0 ~10.0 kgf.m, 57.9 ~72.3 lb-ft)

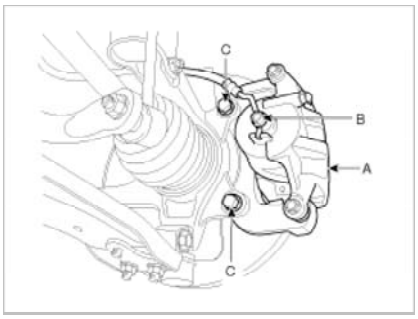

mcx30.com

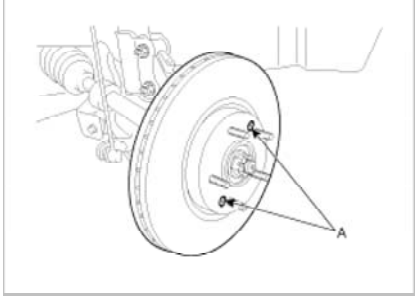

Replacement

Front brake pads

1. Remove the brake hose mounting bracket bolt (A).

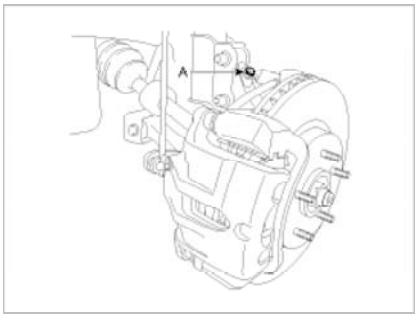

2. Loosen the guide rod bolt (B) and pivot the caliper (A) up out of the way.

Tightening torque:
21.6 ~31.4 N.m (2.2 ~3.2 kgf.m, 15.9 ~23.1 lb-ft)

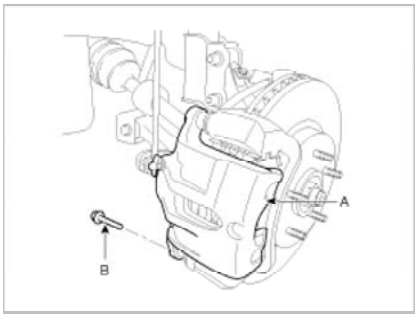

3. Replace pad shim (D), pad retainers (C) and brake pads (B) in the caliper bracket (A).

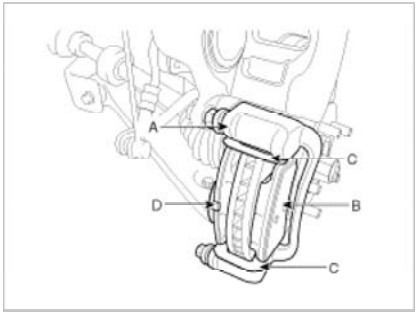

Inspection

Front brake disc thickness check

1. Check the brake pads for wear and fade.
2. Check the brake disc for damage and cracks.
3. Remove all rust and contamination from the surface, and measure the disc thickness at 8 points, at least, of same distance (5mm) from the brake disc outer circle.

Brake disc thickness
[2WD]
- Standard : 26 mm (1.02 in)

mcx30.com

- Standard : 28 mm (1.10 in)
- Service Limit : 26.4 mm (1.04 in)
Deviation: Less than 0.005mm (0.0002in)

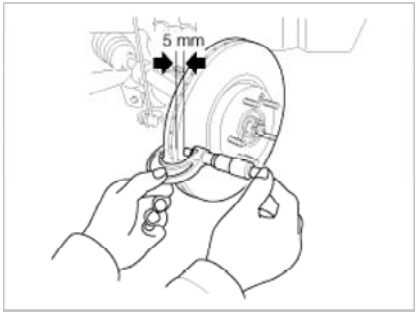

4. If wear exceeds the limit, replace the discs and pad assembly left and right of the vehicle.

Front Brake Pad Check

1. Check the pad wear. Measure the pad thickness and replace it, if it is less than the specified value.

Pad thickness
Standard value: 11 mm (0.43 in)
Service limit: 2.0 mm (0.0787 in)

2. Check that grease is applied, to sliding contact points and the pad and backing metal for damage.

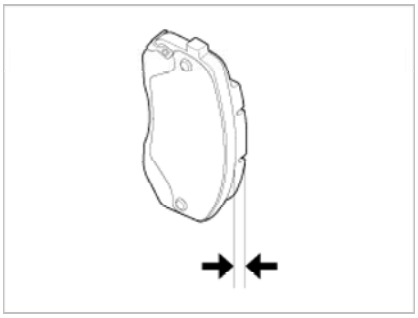

Front brake disc runout check

1. Place a dial gauge about 5mm (0.2 in.) from the outer circumference of the brake disc, and measure the runout of the disc.

Brake disc runout
Limit: 0.025 mm (0.00098 in.) or less (new one)

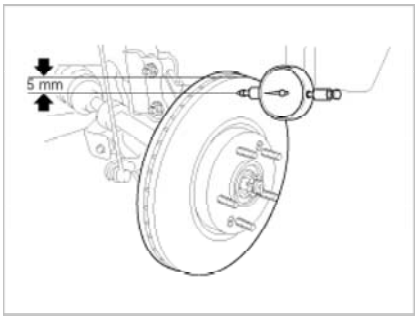

2. If the runout of the brake disc exceeds the limit specification, replace the disc, and then measure the runout again.
3. If the runout does not exceed the limit specification, install the brake disc after turning it 180° and then check the runout of the brake disc again.
4. If the runout cannot be corrected by changing the position of the brake disc, replace the brake disc.

Installation

1. Installation is the reverse of removal.
2. Use a SST (09581-11000) when installing the brake caliper assembly.

mcx30.com

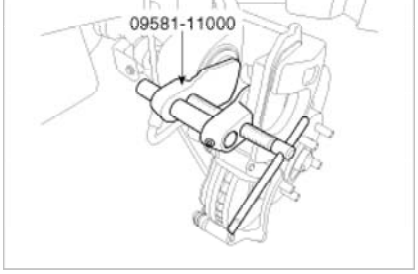

3. After installation, bleed the brake system. (Refer to Brake system bleeding)

Brake System > Brake System > Rear Disc Brake > Components and Components Location

Components

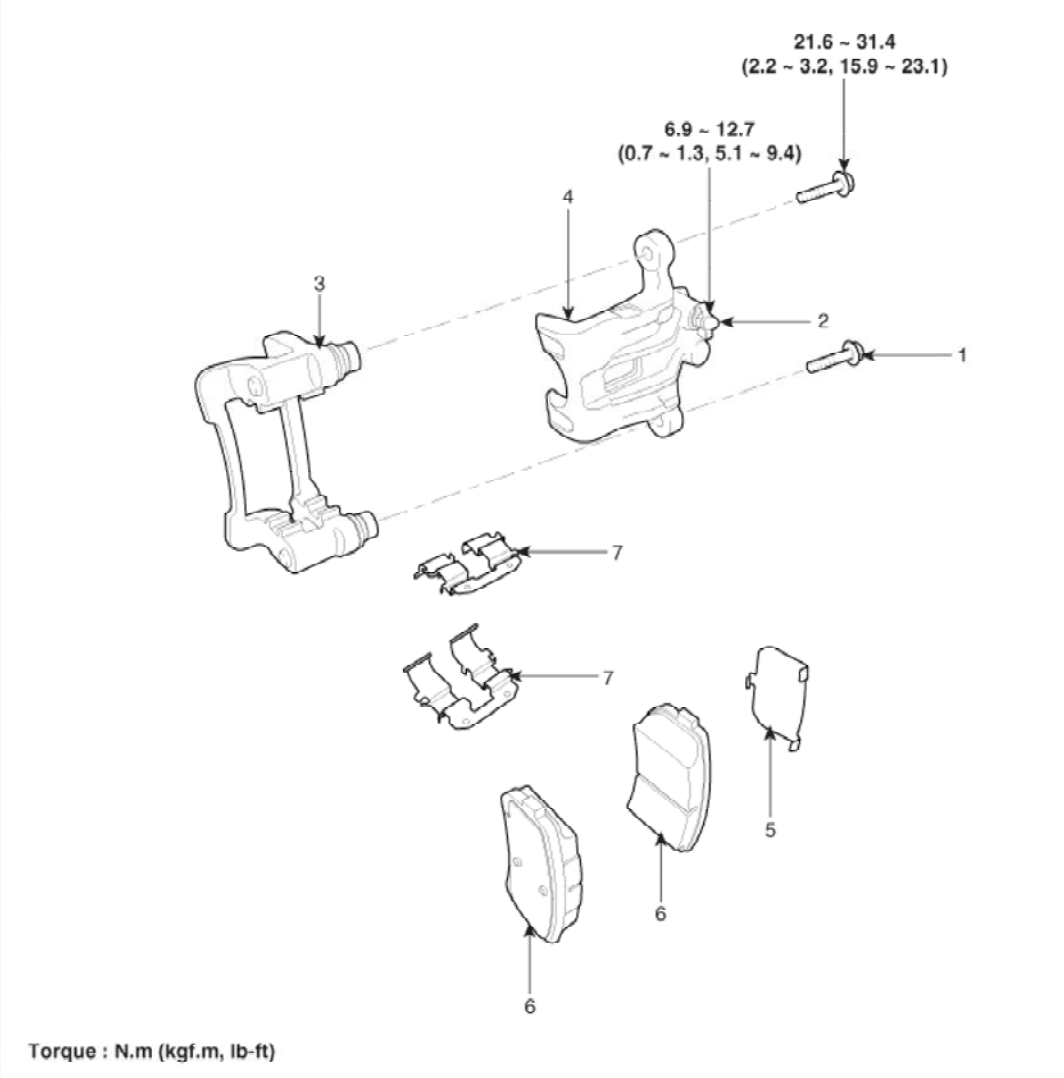

1. Guide rod bolt 2. Bleed screw 3. Caliper bracket 4. Caliper body	5. Inner pad shim 6. Brake pad 7. Pad retainer

Brake System > Brake System > Rear Disc Brake > Repair procedures

Removal

1. Remove the rear wheel & tire.

Tightening torque:

mcx30.com

2. Remove the rear shock absorber. [2WD Only]
   (Refer to the Suspension group - rear shock absorber)
3. Remove the rear upper arm. [2WD Only]
4. Loosen the hose eyebolt (B) and caliper mounting bolts (C), then remove the rear caliper assembly (A).

Tightening torque:
Brake hose to caliper(B):
24.5 ~ 29.4 N.m (2.5 ~ 3.0 kgf.m, 18.1 ~ 21.7 lb-ft)
Caliper assembly to carrier(C):
78.5 ~ 98.1 N.m (8.0 ~10.0 kgf.m, 57.9 ~ 72.3 lb-ft)

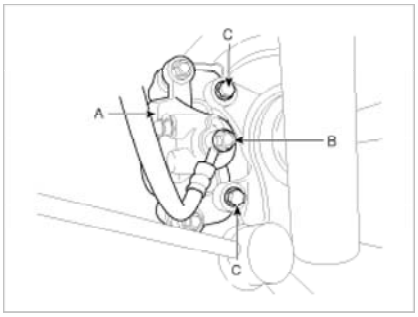

5. Remove the rear brake disc by loosening the screws (A).

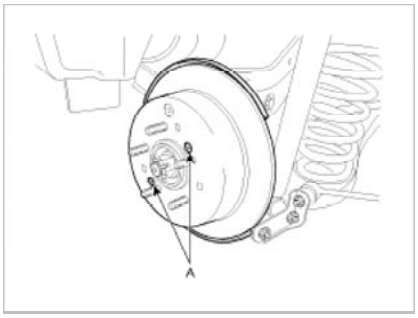

Replacement

Rear brake pads

1. Loosen the guide rod bolt (B) and pivot the caliper (A) up out of the way.

Tightening torque:
21.6 ~31.4 N.m (2.2 ~3.2 kgf.m, 15.9 ~23.1 lb-ft)

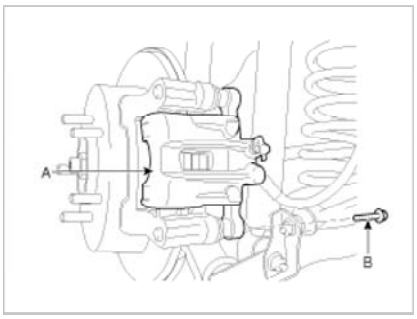

2. Replace pad shim (D), pad retainers (C) and brake pads (B) in the caliper bracket (A).

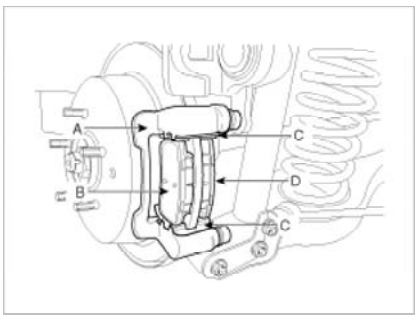

mcx30.com

Inspection

Rear Brake Disc Thickness Check

1. Check the brake pads for wear and fade.
2. Check the brake disc for damage and cracks.
3. Remove all rust and contamination from the surface, and measure the disc thickness at 8 points, at least, of same distance (5mm) from the brake disc outer circle.

Brake disc thickness
Standard: 10 mm (0.39 in)
Service limit: 8.4 mm (0.33 in)
Deviation: less than 0.005 mm (0.0002 in)

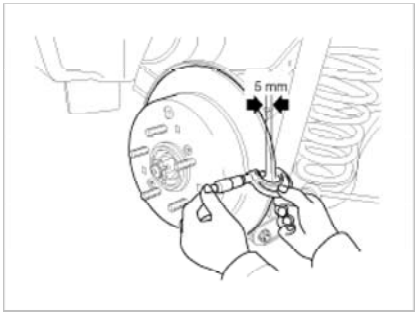

4. If wear exceeds the limit, replace the discs and pad assembly left and right of the vehicle.

Rear Brake Pad Check

1. Check the pad wear. Measure the pad thickness and replace it, if it is less than the specified value.

Pad thickness
Standard value: 10 mm (0.393 in)
Service limit: 2.0 mm (0.0787 in)

2. Check that grease is applied, to sliding contact points and the pad and backing metal for damage.

Rear Brake Disc Runout Check

1. Place a dial gauge about 5mm (0.2 in.) from the outer circumference of the brake disc, and measure the runout of the disc.

Brake disc runout
Limit: 0.03 mm (0.00118 in.) or less (new one)

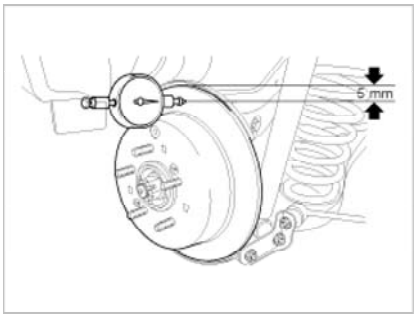

2. If the runout of the brake disc exceeds the limit specification, replace the disc, and then measure the runout again.
3. If the runout exceeds the limit specification, install the brake disc after turning it 180° and then check the runout of the brake disc again.
4. If the runout cannot be corrected by changing the position of the brake disc, replace the brake disc.

Installation

1. Installation is the reverse of removal.
2. Use a SST (09581-11000) when installing the brake caliper assembly.

mcx30.com

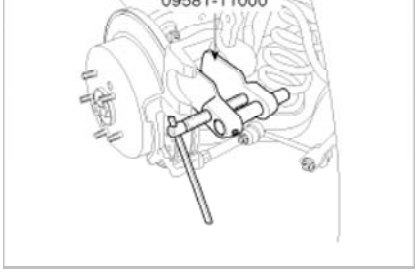

3. After installation, bleed the brake system. (Refer to Brake system bleeding)

Brake System > Parking Brake System > Parking Brake Assembly > Components and Components Location

Components (1)

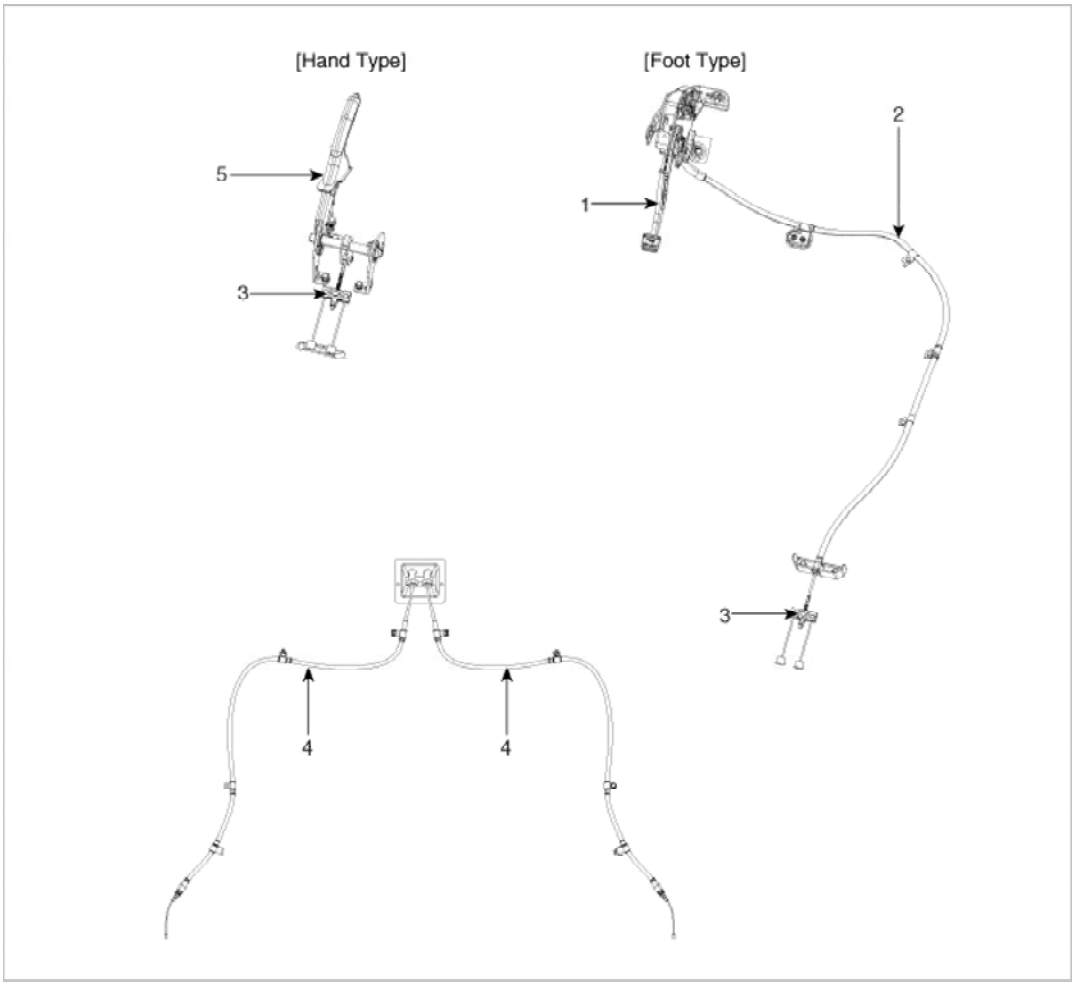

1. Parking brake pedal 2. Front parking brake cable (Foot type olny) 3. Equalizer assembly	4. Rear parking brake cable 5. Parking brake lever assembly

Components (2)

mcx30.com

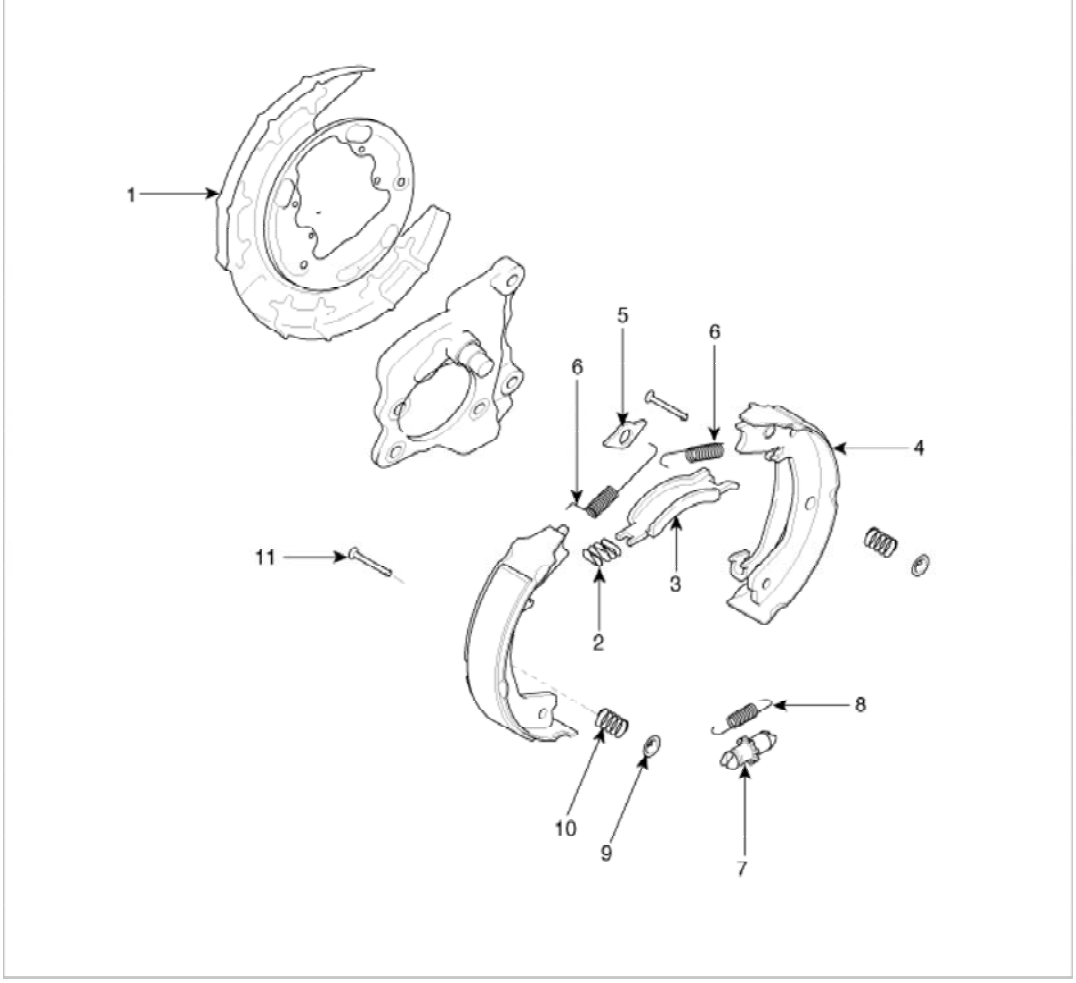

1. Backing plate 2. Strut spring 3. Strut 4. Shoe and lining 5. Shoe guide 6. Returm spring	7. Adjuster 8. Return sping 9. Cup washer 10. Shoe hold down spring 11. Shoe hold down pin

Components (3)

mcx30.com

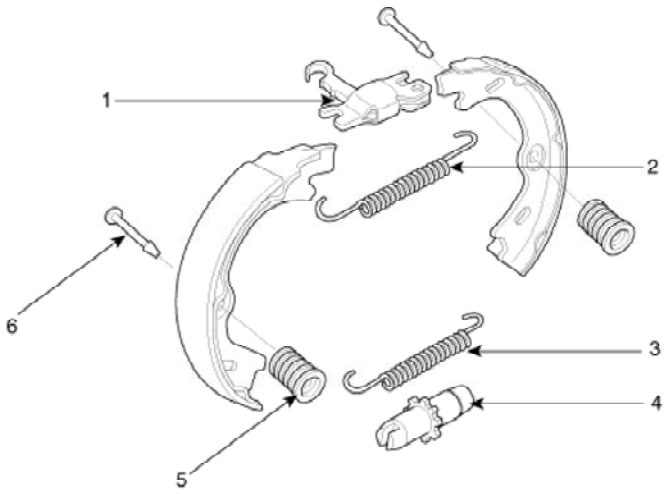

1. Operating lever 2. Upper spring 3. Lower spring	4. Adjuster 5. Shoe hold down spring 6. Shoe hold down pin

Brake System > Parking Brake System > Parking Brake Assembly > Repair procedures

Removal

Parking Brake Pedal [Foot type]

1. Remove the crash pad lower panel. (Refer to the Body group-crash pad)
2. Remove the junction box. (Refer to the Body Electrical System group - Fuses and Relays)
3. Disconnect the parking brake switch connector (A).

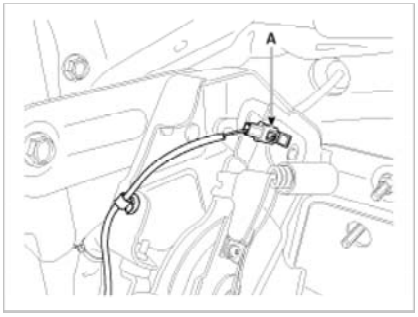

4. Remove the parking brake pedal mounting bolts (A) and nut.(B)

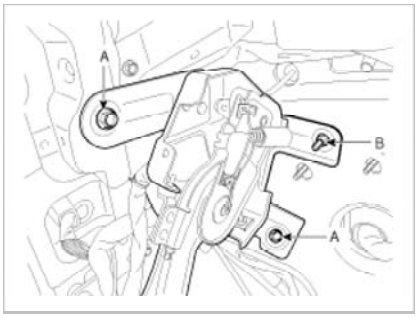

5. Remove the parking brake cable mounting bolts.
6. Remove the parking brake cable adjusting nut(A) and the fixing clip(B), and then remove the parking brake pedal.

mcx30.com

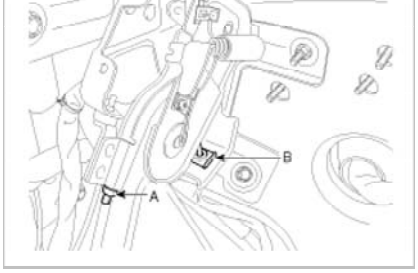

7. Remove the floor console. (Refer to the Body group - Console)
8. Remove the floor console bracket.

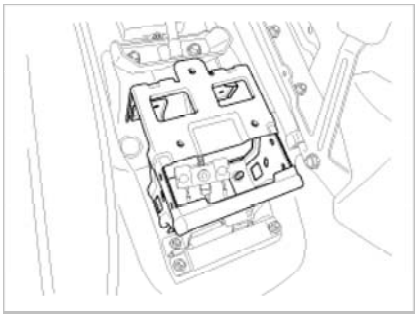

9. Remove the parking brake cable fixing clip(A) and bolts.

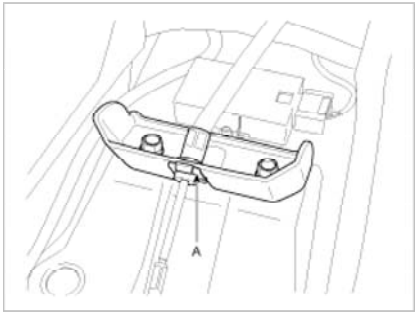

10. Loosen the adjusting nut(A) and then remove the front parking brake cable.

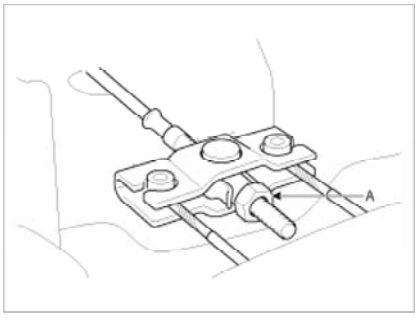

11. Raise the vehicle, and make sure it is securely supported.
12. Remove the parking brake cable (A) after removing the retaining ring (B).

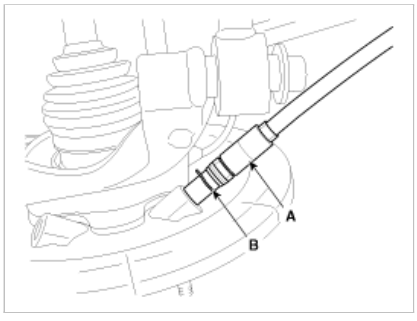

13. Loosen the parking brake cable bracket bolts and remove the rear parking brake cable.

Parking Brake Lever [Hand type]

1. Remove the floor console. (Refer to the Body group - Console)
2. Remove the floor console bracket.

mcx30.com

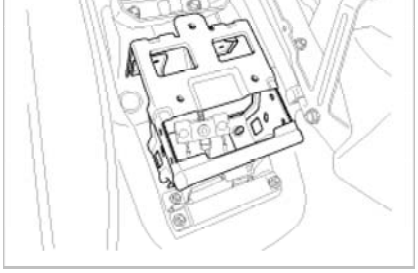

3. Disconnect the connector(A) of parking brake switch.
4. Loosen the adjusting nut(A) and remove the parking brake cables.

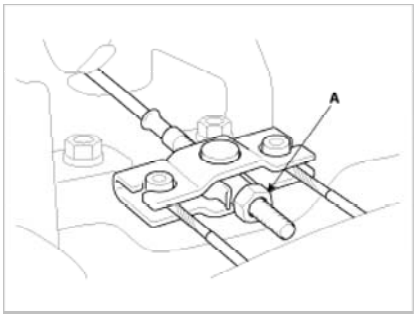

5. Remove the parking brake lever assembly after removing the 4 bolts(A) as shown below.

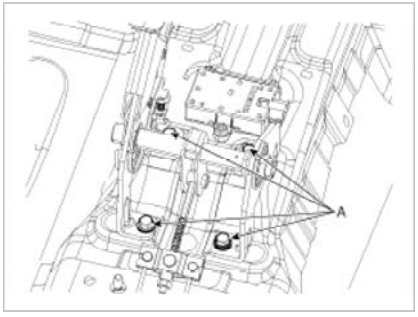

6. Raise the vehicle and make sure it is securely supported.
7. Remove the parking brake cable(A) after removing the retaining(B).

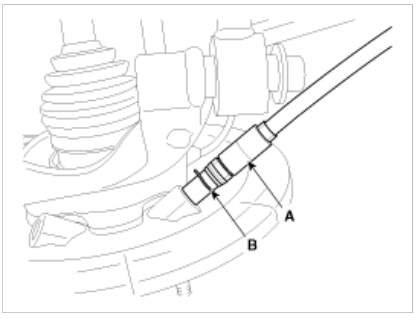

8. Loosen the parking brake cable braket bolts and remove the parking brake cable.

Parking Brake Shoe [2WD]

1. Raise the vehicle, and make sure it is securely supported.
2. Remove the rear tire and wheel.
3. Remove the rear brake caliper and Rear disc brake.
   (Refer to "Rear disc brake removal")
4. Remove the parking brake cable (B), after removing the clip (A).

mcx30.com

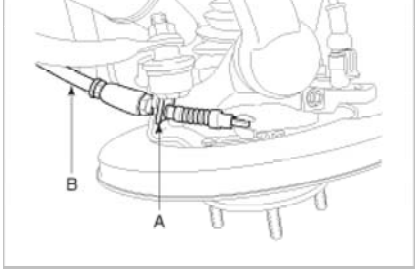

5. Remove the shoe hold down pin (A) and the spring (B) by pressing and rotating the spring.

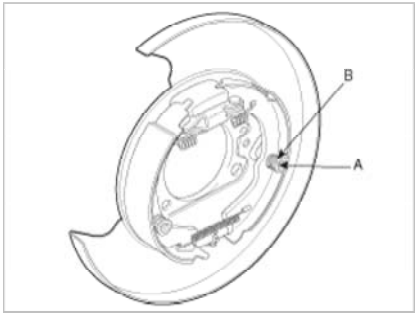

6. Remove the adjuster assembly (B) and the lower return spring (A).

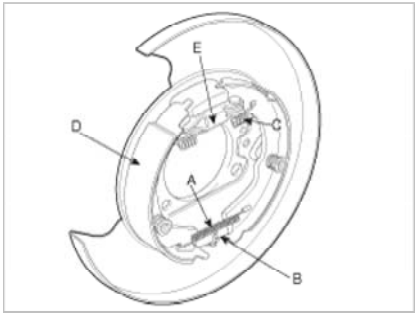

7. Remove the upper return spring (C) and the brake shoes (D).
8. Remove the operating lever assembly (E).

Parking Brake Shoe [4WD]

1. Raise the vehicle, and make sure it is securely supported.
2. Remove the rear tire and wheel, then remove the brake caliper. (Refer to "Rear disc brake removal")
3. Remove the rear brake disc by loosening the screws (A).

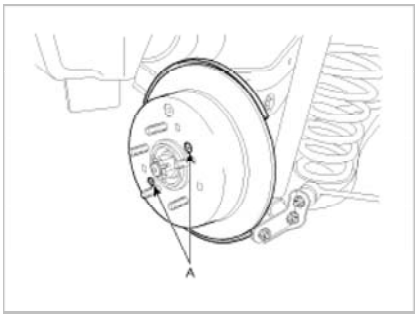

4. Remove the rear hub unit bearing (A).

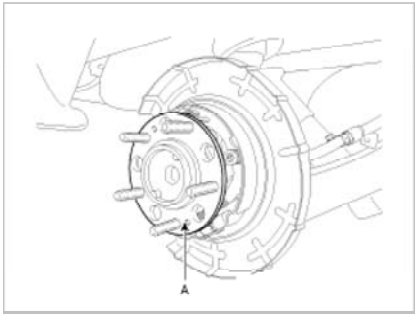

5. Remove the shoe hold down pin (A) and the spring (B) by pushing the retainer spring and turning the pin.

mcx30.com

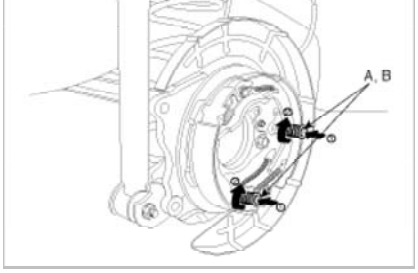

6. Remove the adjuster assembly (A) and the return spring (B).

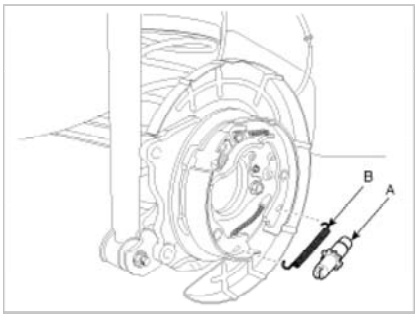

7. Remove the parking brake cable (B) from the brake shoe (A).

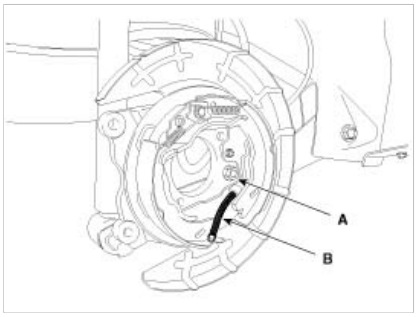

8. Remove the strut (C) and the strut spring (D).

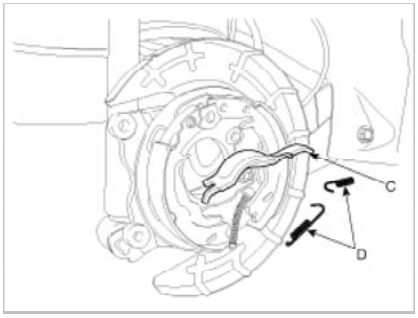

9. Remove the brake shoe.
10. Remove the parking brake cable retaining (B), from the parking brake cable (A).

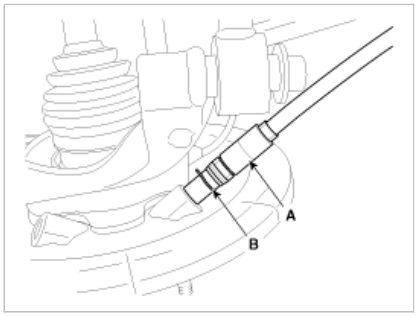

Installation

Parking Brake Shoe [2WD]

1. Install the operating lever assembly (E).

mcx30.com

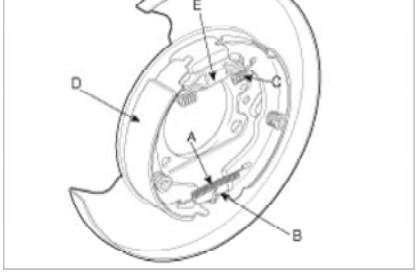

2. Install the upper return spring (C) and the brake shoes (D).
3. Install the adjuster assembly (B) and the lower return spring (A).

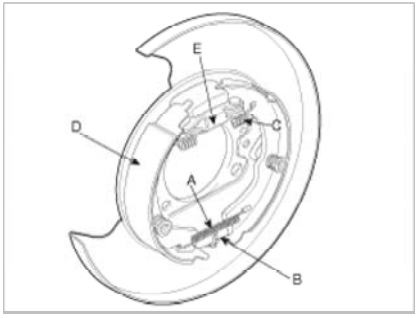

4. Install the shoe hold down pin (A) and spring (B) by pressing and rotating the spring.

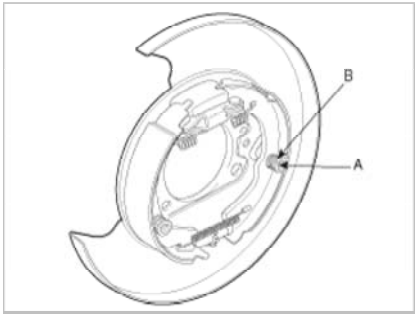

5. Install the parking brake cable (B), then install the clip (A).

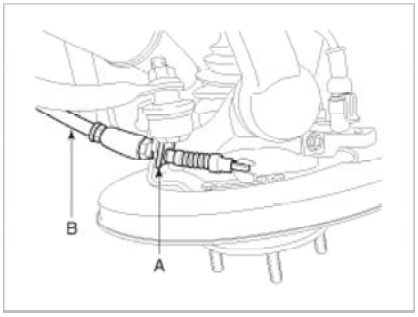

6. Install the rear brake disc, then adjust the rear brake shoe clearance.
   (1) Remove the plug from the disc.
   (2) Rotate the toothed wheel of adjuster by a screw driver until the disc is not moving, and then return it by 4 notches in the opposite direction.
7. Install the brake caliper assembly. (Refer to "Rear brake installation")
8. Install the tire and wheel, after installing the plug on the disc.
9. If the parking brake shoe or the brake disc are replaced a newly one, perform the brake shoe bed-in procedure.
   (1) Hand type - While operating the arking brake pedal for 68.6N (7kgf, 15.4 lbf) effort, drive the vehicle 500 meters (0.31 miles) at the speed of 30kph (18.6 mph).
   Foot type - While operating the parking brake lever for 147N (15kgf, 33 lbf) effort, drive the vehicle 500 meters (0.31 miles) at the speed of 30kph (18.6 mph).
   (2) Repeat the above procedure more than three times.
   (3) Must be held on 20% uphill.

> **CAUTION**
>
> After adjusting parking brake, notice following matter;
> 1. Must be free from troubles when the parking pedal is operated at 686.5 N (70 kgf, 154 lbf).

mcx30.com

3. The parking brake indicator lamp must be on after the parking pedal is worked and must be off after the pedal is released.

Parking Brake Shoe [4WD]

1. Install the brake shoe(A) to the back plate(B).

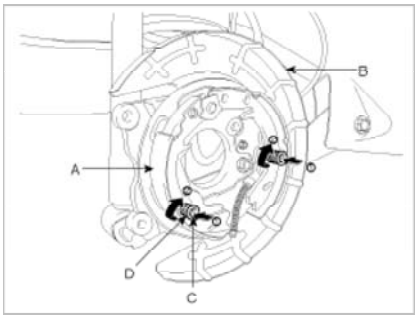

2. Install the shoe hold down pin(C) and the spring(D) by pushing the retainer spring (D) and turning the pins.
3. After installing the strut (A) and upper return spring (B), install the adjuster assembly (C) and the lower return spring (D).

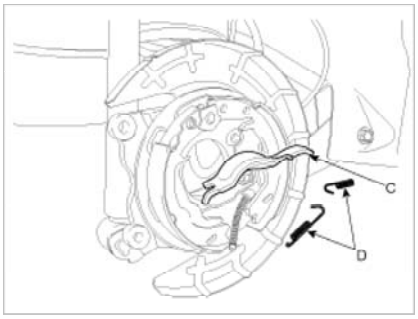

4. Install the parking brake cable (A), then install the retaining (B).

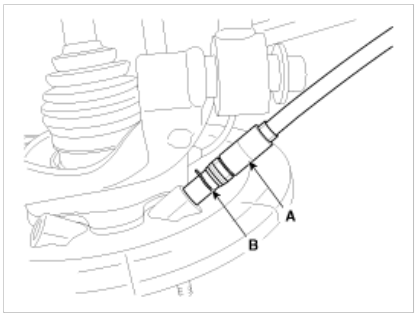

5. Apply a coating of the specified grease to each sliding parts of parking brake as shown.

Specified grease :
Multi purpose grease SAE J310, NLGI No.2

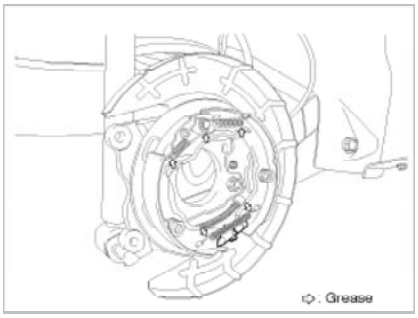

6. Install the rear brake disc, then adjust the rear brake shoe clearance.
   (1) Remove the plug from the disc.
   (2) Rotate the toothed wheel of adjuster by a screw driver until the disc is not moving, and then return it by 4 notches in the opposite direction.
7. Install the brake caliper. (Refer to "Rear brake installation")
8. Install the tire and wheel.
9. If the parking brake shoe or the brake disc are replaced a newly one, perform the brake shoe bed-in procedure.
   (1) Hand type - While operating the arking brake pedal for 68.6N (7kgf, 15.4 lbf) effort, drive the vehicle 500 meters (0.31 miles) at the speed of

mcx30.com

30kph (18.6 mph).

(2) Repeat the above procedure more than three times.

(3) Must be held on at 20% uphill.

> **CAUTION**
>
> After adjusting parking brake, notice following matter;
> 1. Must be free from troubles when the parking pedal is operated at 686.5 N (70 kgf, 154 lbf).
> 2. Check that all parts move smoothly.
> 3. The parking brake indicator lamp must be on after the parking pedal is worked and must be off after the pedal is released.

Parking Brake Lever [Hand Type]

1. Install the parking brake lever assembly, then tighten the mounting bolts(A).

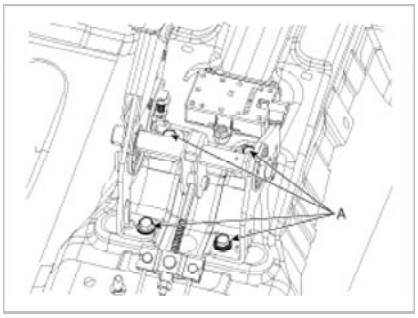

2. Apply a coating of the specified grease to each sliding parts (A) of the ratchet plate or the ratchet pawl.

Specified grease :
Multi purpose grease SAE J310, NLGI No.2

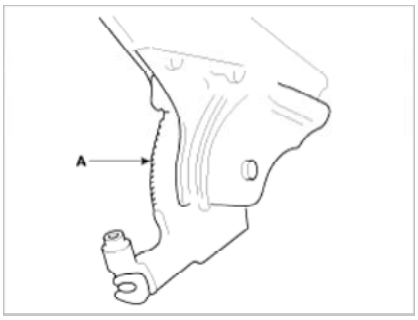

3. Install the parking brake cable adjuster, then adjust the parking brake lever stroke by turning adjusting nut (A).

Parking brake lever stroke :
6 cliks (Pull the lever with 20kgf)

> **NOTE**
>
> After repairing the parking brake shoe, adjust the brake shoe clearance, and then adjust the parking brake lever stroke. (Refer to "Parking brake shoe installation")

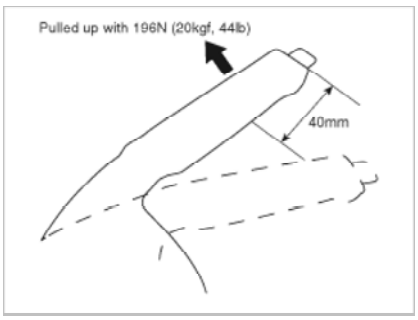

mcx30.com

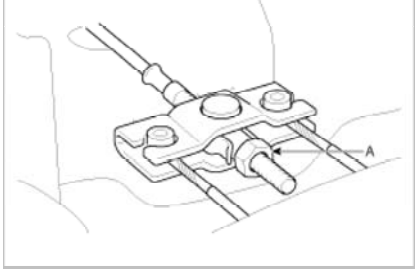

4. Release the parking brake lever fully, and check that parking brakes do not drag when the rear wheels are turned. Readjust if necessary.
5. Make sure that the parking brakes are fully applied when the parking brake lever is pulled up fully.
6. Reconnect the connector of parking brake switch.

> **NOTE**
>
> Inspect the continuity of parking brake switch.

When the brake lever is pulled : continuity
When the brake lever is released : no continuity

7. Install the floor console. (Refer to Body group - "Floor console")

Parking Brake Pedal [Foot type]

1. Install the parking brake cable.
2. Install the holding clip (B) and the cable adjusting nut(A) after fixing the parking brake cable.

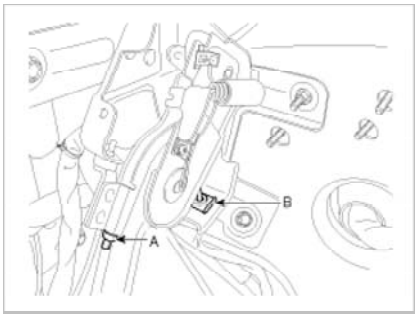

3. Install the parking brake pedal, and then install the parking brake pedal mounting bolts (A) and nut(B).

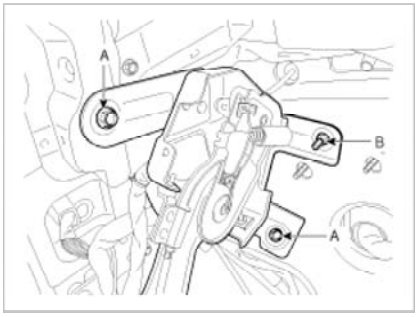

4. Adjust the parking brake pedal stroke by turning the adjusting nut (A).
   (1) Operate the parking brake pedal through a full stroke over 3 times for setting the parking cables.
   (2) Adjust the adjusting nut (A) for parking brake pedal stroke 4notches when operating effort is 196N(20kgf.44lb).

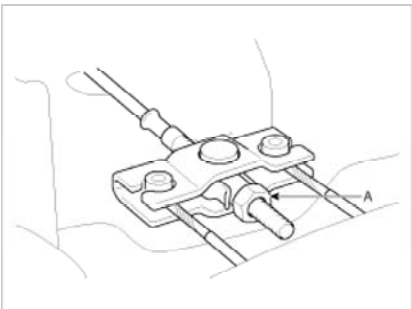

> **CAUTION**

mcx30.com

2. After adjusting parking brake, notice following matter.
1) Must be free from clearance between adjusting nut and pin.
2) Check securely that the brake is not dragging.

5. Reconnect the parking brake switch connector(A).

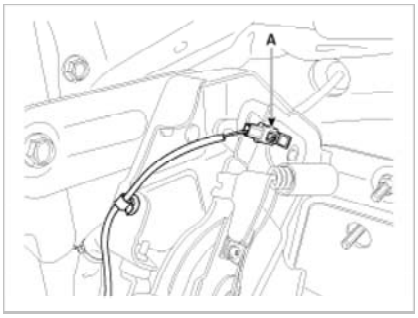

6. Install the juncting box. (Refer to the Body Electrical System group - Fuses and Relays)
7. Install the crash pad lower panel. (Refer to Body group - Crash pad)

Adjustment

Parking Brake Shoe Clearance Adjustment

1. Raise the vehicle, and make sure it is securely supported.
2. Remove the rear tire and wheel.
3. Remove the plug from the disc.

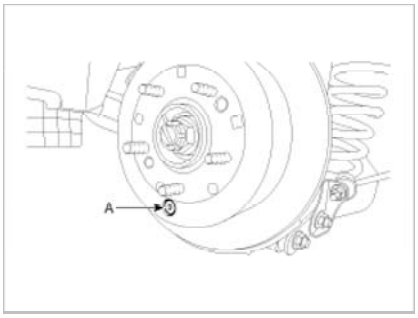

4. Rotate the toothed wheel of adjuster by a screw driver until the disc is not moving, and then return it by 4 notches in the opposite direction.
5. Install the rear wheel & tire after installing the plug on the disc.

Parking Brake Pedal Stroke Adjustment

1. Operate the parking brake pedal through a full stroke over 3 times for setting the parking cables.
2. Adjust the adjusting nut(A) for parking barke pedal stoke 4 notches when operating effort is 196N(20kgf, 44lbf)

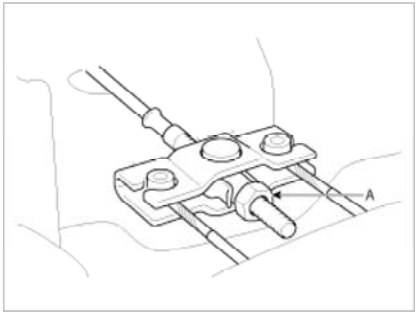

CAUTION

1. The parking brake adjustment must be carried out after adjusting the rear shoe.
2. After adjusting parking brake, notice following matter.
1) Must be free from clearance between adjusting nut and pin.
2) Check securely that the brake is not dragging.

Parking Brake Lever Stroke Adjustment

1. Raise the vehicle, and make sure it is securely supported.
2. Remove the floor console pad.
3. Adjust the parking brake lever stroke by turning adjusting nut (A).

mcx30.com

6 cliks (Pull the lever with 20kgf)

NOTE

After repairing the parking brake shoe, adjust the brake shoe clearance, and then adjust the parking brake lever stroke. (Refer to "Parking brake shoe installation")

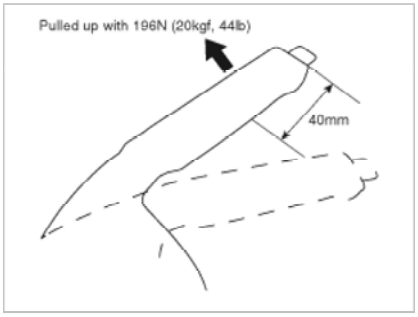

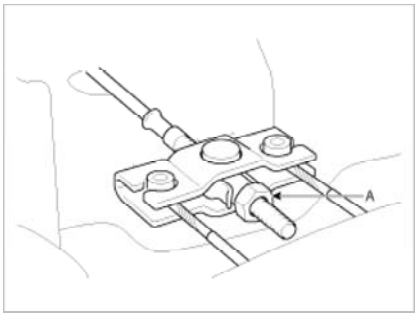

4. Release the parking brake lever fully, and check that parking brakes do not drag when the rear wheels are turned. Readjust if necessary.
5. Make sure that the parking brakes are fully applied when the parking brake lever is pulled up fully.
6. Install the floor console.

Brake System > ESC(Electronic Stability Control) System > Components and Components Location

Components

mcx30.com

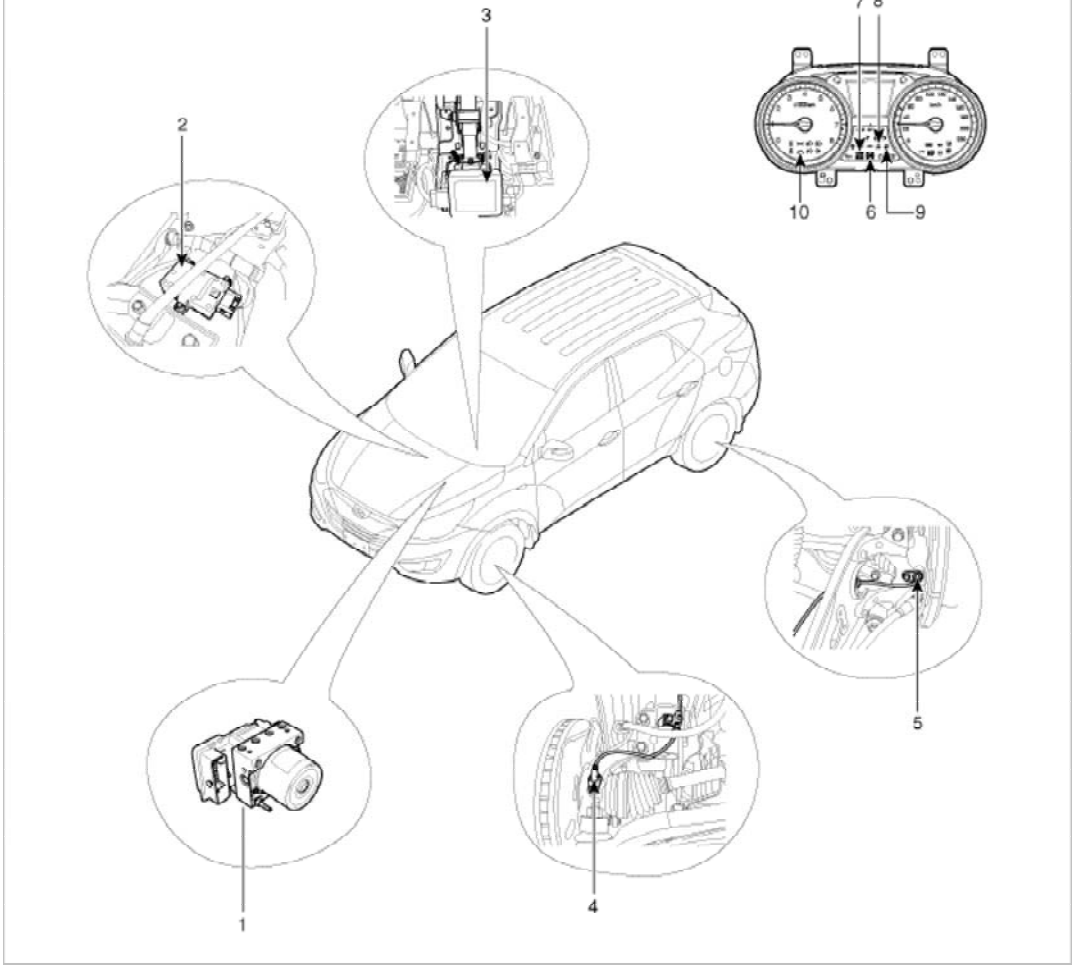

1. HECU module	6. ABS Warning lamp
2. Yaw rate & Lateral & Longitudinal G sensor	7. Parking brake/EBD warning lamp
3. Steering angle sensor	8. ESC warming lamp
4. Front wheel speed sensor	9. ESC OFF lamp
5. Rear wheel speed sensor	10. DBC warning lamp

Brake System > ESC(Electronic Stability Control) System > Description and Operation

Description of ESC

Optimum driving safety now has a name : ESC, the Electronic Stability Control.
ESC recognizes critical driving conditions, such as panic reactions in dangerous situations, and stabilizes the vehicle by wheel-individual braking and engine control intervention.
ESC adds a further function known as Active Yaw Control (AYC) to the ABS, TCS, EBD and ESC functions. Whereas the ABS/TCS function controls wheel slip during braking and acceleration and, thus, mainly intervenes in the longitudinal dynamics of the vehicle, active yaw control stabilizes the vehicle about its vertical axis.
This is achieved by wheel individual brake intervention and adaptation of the momentary engine torque with no need for any action to be taken by the driver.
ESC essentially consists of three assemblies : the sensors, the electronic control unit and the actuators.
The stability control feature works under all driving and operating conditions. Under certain driving conditions, the ABS/TCS function can be activated simultaneously with the ESC function in response to a command by the driver.
In the event of a failure of the stability control function, the basic safety function, ABS, is still maintained.

mcx30.com

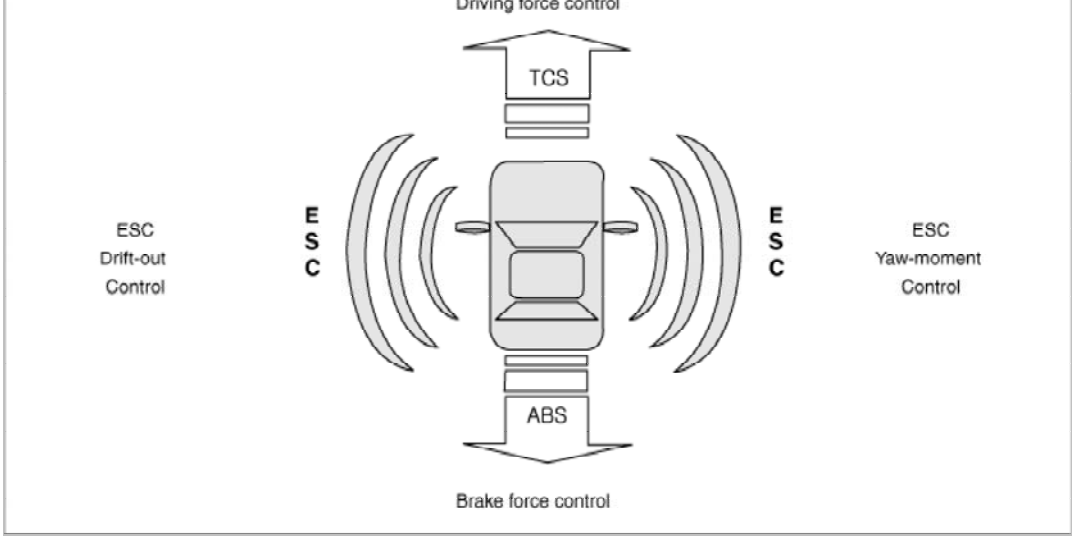

Description of ESC Control

ESC system includes ABS/EBD, TCS and AYC function.
ABS/EBD function : The ECU changes the active sensor signal (current shift) coming from the four wheel sensors to the square wave. By using the input of above signals, the ECU calculates the vehicle speed and the acceleration & deceleration of the four wheels. And, the ECU judges whether the ABS/EBD should be actuated or not.
TCS function prevents the wheel slip of drive direction by adding the brake pressure and engine torque reduction via CAN communication. TCS function uses the wheel speed sensor signal to determine the wheel slip as far as ABS function.
AYC function prevents unstable maneuver of the vehicle. To determine the vehicle maneuver, AYC function uses the maneuver sensor signals(Yaw Rate Sensor, Lateral Acceleration Sensor, Steering Wheel Angle Sensor).
If vehicle maneuver is unstable (Over Steer or Under Steer), AYC function applies the brake pressure on certain wheel, and send engine torque reduction signal by CAN.
After the key-on, the ECU continually diagnoses the system failure. (self-diagnosis)If the system failure is detected, the ECU informs driver of the system failure through the BRAKE/ABS/ESC warning lamp. (fail-safe warning)

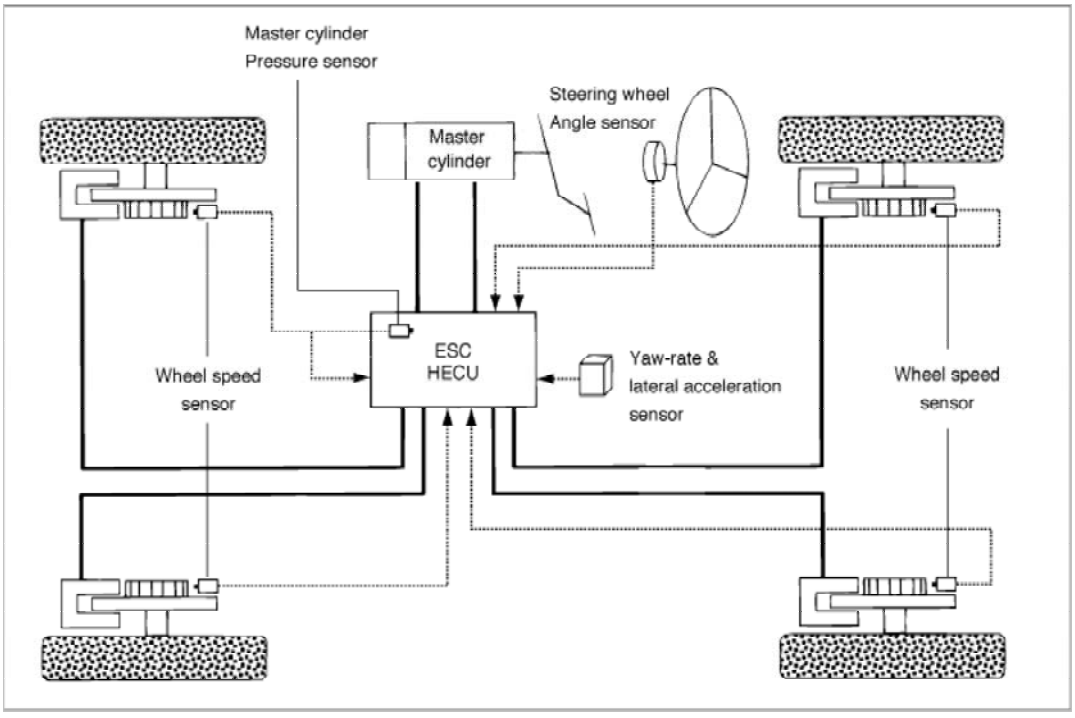

Input and Output Diagram

mcx30.com

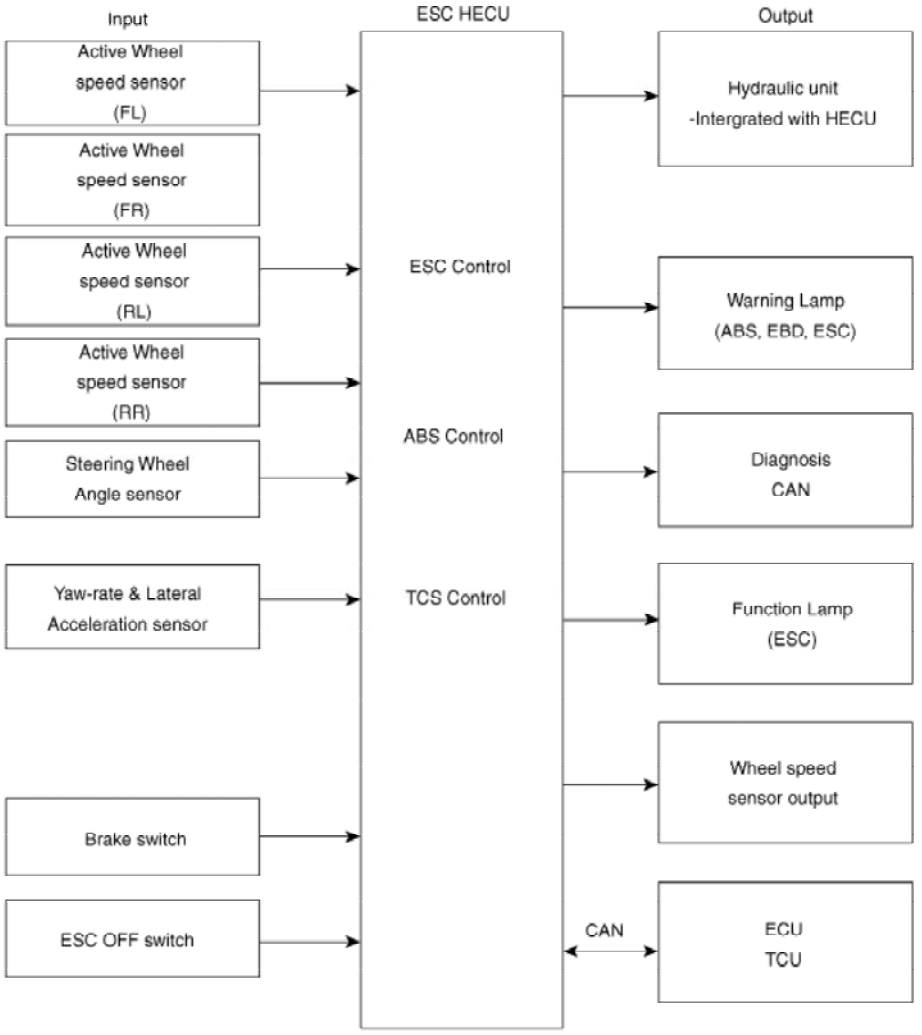

ESC Operation Mode

ESC Hydraulic System Diagram

mcx30.com

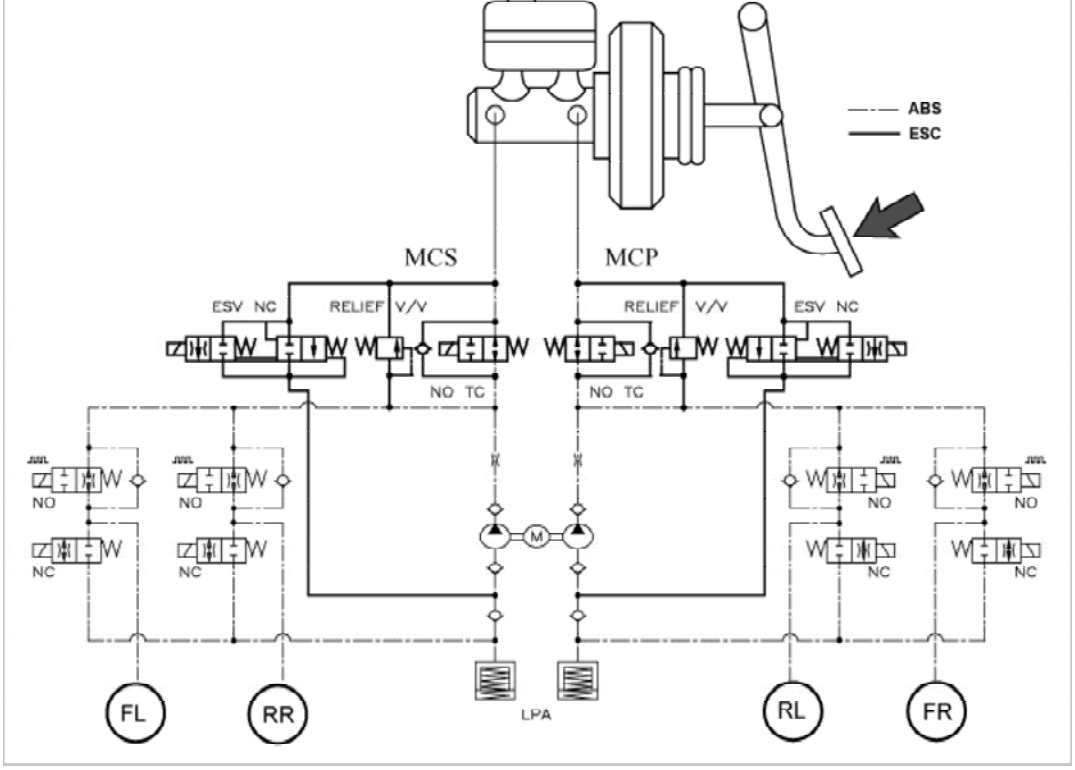

1. ESC Non-operation : Normal braking.

Solenoid valve	Continuity	Valve	Motor pump	TC Valve
IN (NO)	OFF	OPEN	OFF	OFF
OUT (NC)	OFF	CLOSE		

2. ESC operation

Solenoid valve		Continuity	Valve	Motor pump	TC Valve
Understeering (Only inside of rear wheel)	IN(NO)	OFF	OPEN	ON	ON
	OUT(NC)	OFF	CLOSE		
Oversteering (Only outside of front wheel)	IN(NO)	OFF	OPEN		
	OUT(NC)	OFF	CLOSE		

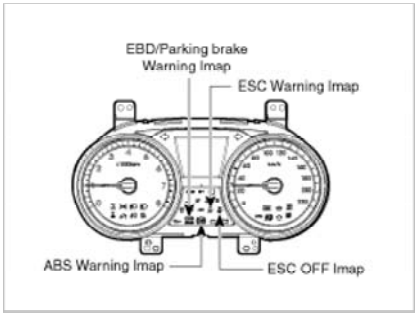

ABS Warning Lamp module

The active ABS warning lamp module indicates the self-test and failure status of the ABS. The ABS warning lamp shall be on:

- During the initialization phase after IGN ON. (continuously 3 seconds).
- In the event of inhibition of ABS functions by failure.
- During diagnostic mode.
- When the ECU Connector is seperated from ECU.
- Cluster lamp is ON when communication is impossible with CAN module.

EBD/Parking Brake Warning Lamp Module

The active EBD warning lamp module indicates the self-test and failure status of the EBD. However, in case the Parking Brake Switch is turned on, the EBD warning lamp is always turned on regardless of EBD functions. The EBD warning lamp shallbe on:

- During the initialization phase after IGN ON. (continuously 3 seconds).

mcx30.com

- When the EBD function is out of order.
- During diagnostic mode.
- When the ECU Connector is seperated from ECU.

ESC Warning Lamp (ESC system)

The ESC warning lamp indicates the self-test and failure status of the ESC.
The ESC warning lamp is turned on under the following conditions :

- During the initialization phase after IGN ON. (continuously 3 seconds).
- When the ESC function is inhibited by system failure.
- When the ESC control is operating. (Blinking - 2Hz)
- During diagnostic mode.(Except standard mode)
- Cluster lamp is ON when communication is impossible with CAN module.

ESC Off Lamp (ESC system)

The ESC Off lamp indicates the self-test and operating status of the ESC.
The ESC Off lamp operates under the following conditions :

- During the initialization mode after IGN ON. (continuously 3 seconds).
- ESC Off lamp is On when driver input the ESC Off switch.

ESC On/Off Switch (ESC system)

The ESC On/Off Switch shall be used to toggle the ESC function between On/Off states based upon driver input.
The On/Off switch shall be a normally open, momentary contact switch. Closed contacts switch the circuit to ignition.
Initial status of the ESC function is on and switch toggle the state.

Brake System > ESC(Electronic Stability Control) System > Schematic Diagrams

Circuit Diagram - ESC(1)

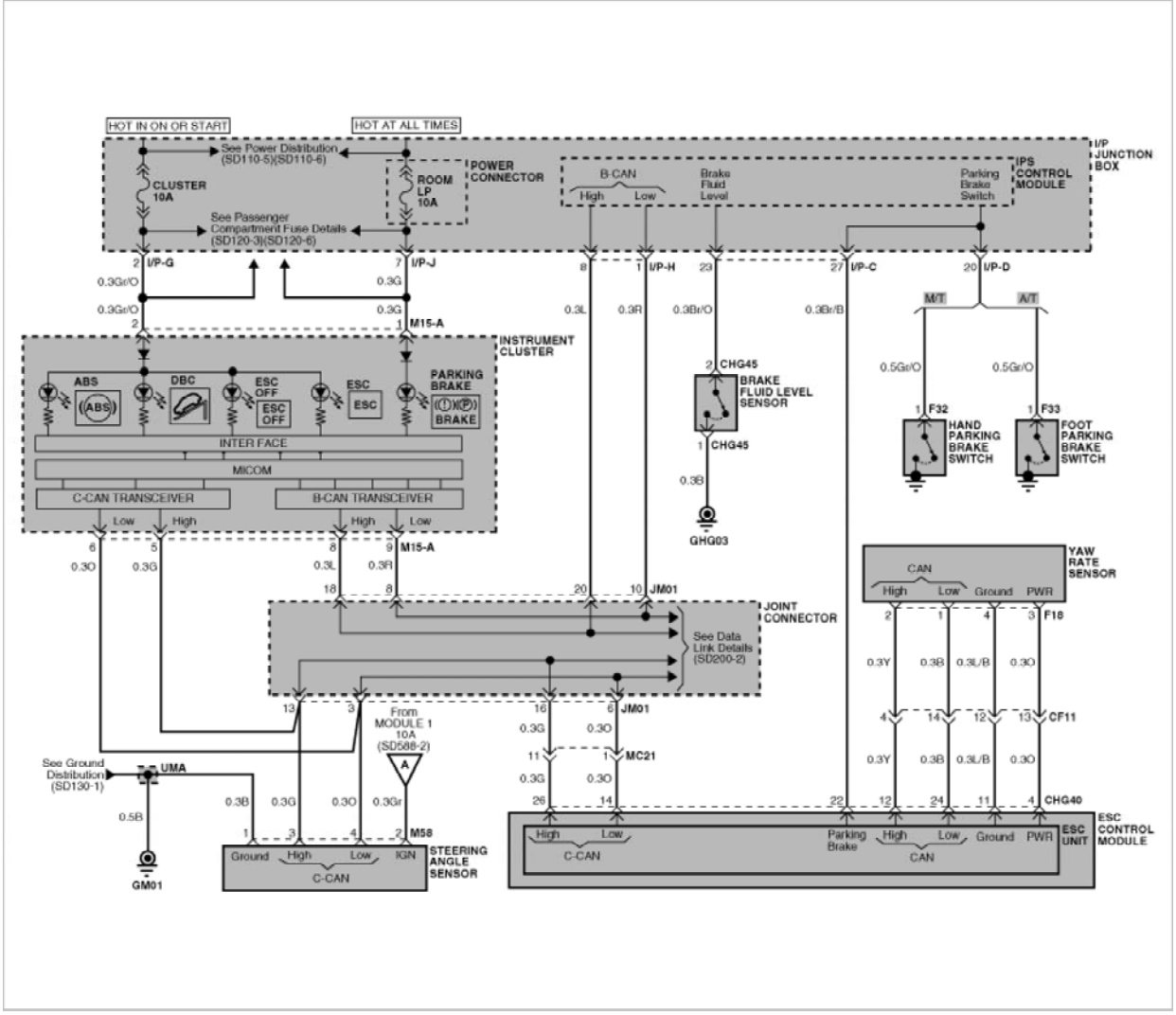

Circuit Diagram - ESC(2)

mcx30.com

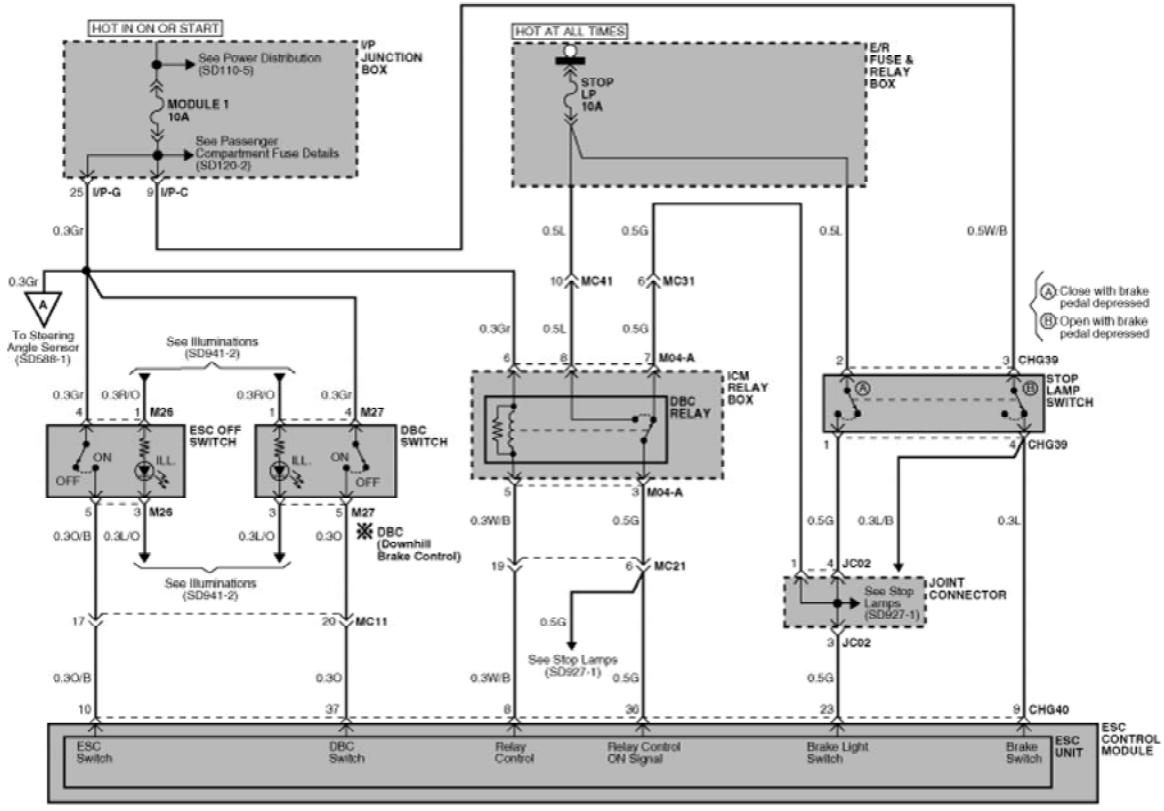

Circuit Diagram - ESC(3)

mcx30.com

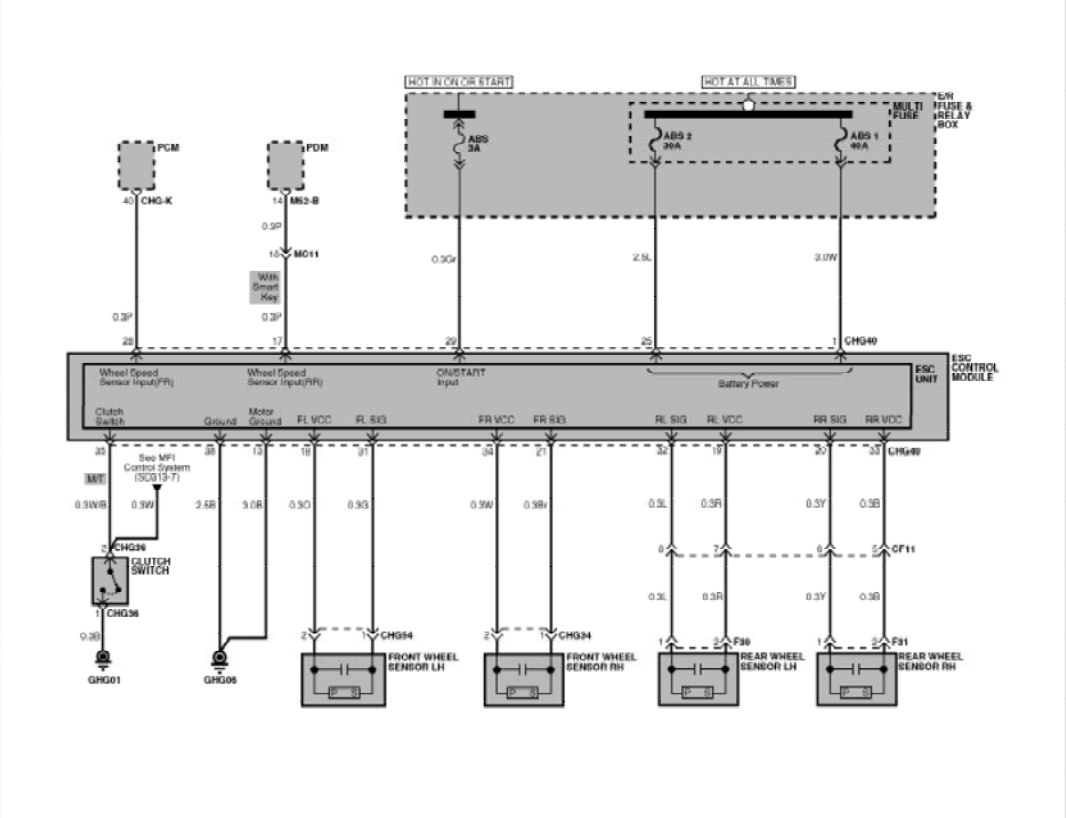

ESC connector input/output

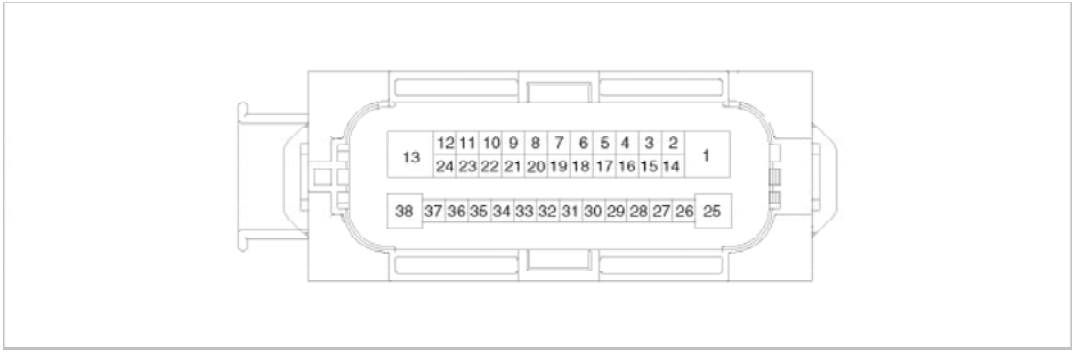

Connector Terminal		Specification	Remark
No	Description		
29	IGNITION1(+)	High level of wake up voltage : 4.5V < V < 16.0V Low level of wake up voltage : V < 2.4V Max. current : I < 50mA	
25	POS. BATTERY 1.(SOLENOID)	Over voltage range : 17.0 ± 0.5V Operating voltage range : 10.0 ± 0.5V < V < 16.0 ± 0.5V Low voltage range : 7.0 ± 0.5V < V < 9.5 ± 0.5V Max. current : I < 40A Max. leakage current : I < 0.25mA	
1	POS. BATTERY 2.(MOTOR)	Operating voltage range: 10.0 ± 0.5V < V < 16.0 ± 0.5V Rush current : I < 110A Max current : I < 40A Max leakage current : I < 0.25mA	
38	GROUND	Rated current : I <550mA Max. current: I < 40A	
		Rush current : I < 110A	

mcx30.com

11	SENSOR GROUND	Rated current : I <250mA	
4	SENSOR POWER	Max current Capability : I < 250mA Max voltage : V_BAT1 -0.8V	
23	BRAKE LIGHT SWITCH	Input voltage (Low) : V < 2V Input voltage (High) : V > 6V Max. Input current : I < 3mA	
9	BRAKE SWITCH		
22	PARKING BRAKE SWITCH	Input voltage (Low) : V < 2V Input voltage (High) : V > 6V Max input current : I < 5mA	
35	CLUTCH SWITCH (M/T Only)		
28	SENSOR FRONT RIGHT OUTPUT	External pull up resistance :1 KΩ < R Output duty :50 ± 20%	
17	SENSOR REAT RIGHT OUTPUT		
10	ESC ON/OFF SWITCH	Input voltage (Low) : V < 2V Input voltage (High) : V > 6V Max input current:I <3mA	
37	DBC SWITCH		
14	CAN BUS LINE(LOW)	Max. Input current : I < 10mA	
26	CAN BUS LINE(HIGH)		
18	SENSOR FRONT LEFT POWER	Output voltage : V_BAT1 -0.6v ~ V_BAT1 -1.1V Output current : Max 30mA	
34	SENSOR FRONT RIGHT POWER		
19	SENSOR REAR LEFT POWER		
33	SENSOR REAR RIGHT POWER		
31	SENSOR FRONT LEFT SIGNAL	Input current LOW : 5.9 ~ 8.4mA Input current HIGH :11.8 ~ 16.8mA Frequency range :1 ~ 2500Hz Input duty : 50 ± 20%	Typ. 7mA Typ. 14mA
21	SENSOR FRONT RIGHT SIGNAL		
32	SENSOR REAR LEFT SIGNAL		
20	SENSOR REAR RIGHT SIGNAL		
12	CAN SENSOR LINE (HIGH)	Max. input current : I < 10mA	
24	CAN SENSOR LINE (LOW)		

Brake System > ESC(Electronic Stability Control) System > Troubleshooting

Failure Diagnosis

1. In principle, ESC and TCS controls are prohibited in case of ABS failure.
2. When ESC or TCS fails, only the failed system control is prohibited.
3. However, when the solenoid valve relay should be turned off in case of ESC failure, refer to the ABS fail-safe.
4. Information on ABS fail-safe is identical to the fail-safe in systems where ESC is not installed.

Memory of Fail Code

1. It keeps the code as far as the backup lamp power is connected. (O)
2. It keeps the code as far as the HCU power is on. (X)

Failure Checkup

1. Initial checkup is performed immediately after the HECU power on.
2. Valve relay checkup is performed immediately after the IG2 ON.
3. It executes the checkup all the time while the IG2 power is on.
4. Initial checkup is made in the following cases.
   (1) When the failure is not detected now
   (2) When ABS and ESC are not in control.
   (3) Initial checkup is not made after ECU power on.
   (4) If the vehicle speed is over 5 mph(8 km/h) when the brake lamp switch is off.
   (5) When the vehicle speed is over 24.8 mph(40 km/h).
5. Though, it keeps on checkup even if the brake lamp switch is on.
6. When performing ABS or ESC control before the initial checkup, stop the initial checkup and wait for the HECU power input again.
7. Judge failure in the following cases.
   (1) When the power is normal.
   (2) From the point in which the vehicle speed reaches 4.9 mph(8 km/h) after HECU power on.

Countermeasures in Fail

mcx30.com

2. Turn the valve relay off.
3. Stop the control during the operation and do not execute any until the normal condition recovers.

Warning Lamp ON

1. ESC operation lamp turn on for 3sec after IGN ON.
2. ESC operation lamp blinks when ESC Act.
3. ESC OFF warning lamp turn on in case of
   A. ESC Switch OFF
   B. ESC Failure Detect
   C. 3sec after IGN ON
   D. Entering the diagnostic mode

Standard Flow of Diagnostic Troubleshooting

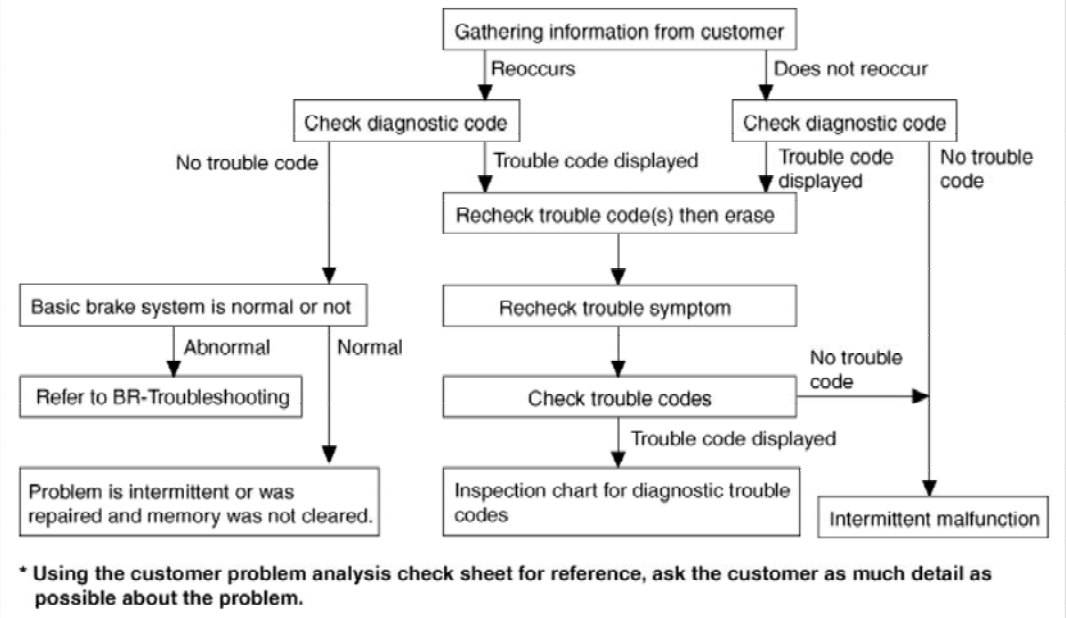

Notes With Regard To Diagnosis

The phenomena listed in the following table are not abnormal.

Condition	Explanation
System check sound	When starting the engine, a thudding sound can sometimes be heard coming from inside the engine compartment. This is because the system operation check is being performed.
ABS operation sound	1. Sound of the motor inside the ABS hydraulic unit operation (whine). 2. Sound is generated along with vibration of the brake pedal (scraping). 3. When ABS operates, sound is generated from the vehicle chassis due to repeated brake application and release (Thump : suspension; squeak: tires)
ABS operation (Long braking distance)	For road surfaces such as snow-covered and gravel roads, the braking distance for vehicles with ABS can sometimes be longer than that for other vehicles. Accordingly, advise the customer to drive safely on such roads by lowering the vehicle speed.
Diagnosis detection conditions can vary depending on the diagnosis code. When checking the trouble symptom after the diagnosis code has been erased, ensure that the requirements listed in "Comment" are met.	

ABS Check Sheet

mcx30.com

ABS Check Sheet

Inspector's Name _____

Customer's Name		Registration No.	
		Registration Year	/ /
		VIN.	
Date Vehicle Brought In	/ /	Odometer	Km Miles

Date the Problem First Occurred	/ /
Frequency of Occurence of Problem	☐ Continuous ☐ Intermittent (times a day)

Symptoms	☐ ABS does not operate.		
	☐ ABS does not operate efficiently.	☐ Intermittent (times a day)	
	ABS Warning Light Abnormal	☐ Remains ON	☐ Does not light up

Diagnostic Trouble Code Check	1st Time	☐ Normal Code	☐ Malfunction Code (Code)
	2nd Time	☐ Normal Code	☐ Malfunction Code (Code)

Problem Symptoms Table

Symptom	Suspect Area
ABS does not operate.	Only when 1~4 are all normal and the problem is still occurring, replace the HECU. 1. Check the DTC reconfirming that the normal code is output. 2. Power source circuit. 3. Speed sensor circuit. 4. Check the hydraulic circuit for leakage.
ABS does not operate intermittently.	Only when 1~4 are all normal and the problem is still occurring, replace the ABS actuator assembly. 1. Check the DTC reconfirming that the normal code is output. 2. Wheel speed sensor circuit. 3. Stop lamp switch circuit. 4. Check the hydraulic circuit for leakage.
Communication with GDS is not possible. (Communication with any system is not possible)	1. Power source circuit 2. CAN line
Communication with GDS is not possible. (Communication with ABS only is not possible)	1. Power source circuit 2. CAN line 3. HECU
When ignition key is turned ON (engine OFF), the ABS warning lamp does not light up.	1. ABS warning lamp circuit 2. HECU
Even after the engine is started, the ABS warning lamp remains ON.	1. ABS warning lamp circuit 2. HECU

mcx30.com

During ABS operation, the brake pedal may vibrate or may not be able to be depressed. Such phenomena are due to intermittent changes in hydraulic pressure inside the brake line to prevent the wheels from locking and is not an abnormality.

ABS Does Not Operate.

Detecting condition

Trouble Symptoms	Possible Cause
Brake operation varies depending on driving conditions and road surface conditions, so diagnosis can be difficult. However if a normal DTC is displayed, check the following probable cause. When the problem is still occurring, replace the ABS control module.	- Faulty power source circuit - Faulty wheel speed sensor circuit - Faulty hydraulic circuit for leakage - Faulty HECU

Inspection procedures

DTC Inspection

1. Connect the GDS with the data link connector and turn the ignition switch ON.
2. Verify that the normal code is output.
3. Is the normal code output?

NO	▸ Check the power source circuit.
YES	▸ Erase the DTC and recheck using GDS.

Check the power source circuit

1. Disconnect the connector from the ABS control module.
2. Turn the ignition switch ON, measure the voltage between terminal 29 of the ABS control module harness side connector and body ground.

Specification: approximately B+

3. Is the voltage within specification?

YES	▸ Check the ground circuit.
NO	▸ Check the harness or connector between the fuse (3A) in the engine compartment junction block and the ABS control module. Repair if necessary.

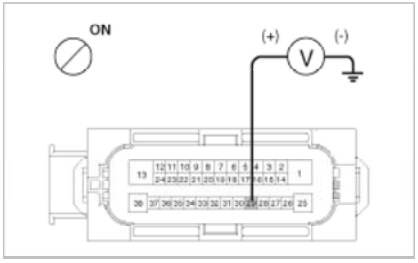

Check the ground circuit

1. Disconnect the connector from the ABS control module.
2. Check for continuity between terminals 13, 38 of the ABS control module harness side connector and ground point.
3. Is there continuity?

YES	▸ Check the wheel speed sensor circuit.
NO	▸ Repair an open in the wire and ground point.

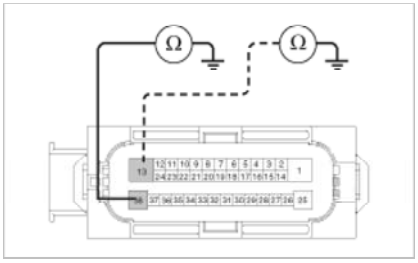

Check the wheel speed sensor circuit

1. Refer to the DTC troubleshooting procedures.
2. Is it normal?

mcx30.com

NO	▸ Repair or replace the wheel speed sensor.

Check the hydraulic circuit for leakage

1. Refer to the hydraulic lines.
2. Inspect leakage of the hydraulic lines.
3. Is it normal?

YES	▸ The problem is still occurring, replace the ABS control module.
NO	▸ Repair the hydraulic lines for leakage.

ABS Does Not Operate (Intermittently).

Detecting condition

Trouble Symptoms	Possible Cause
Brake operation varies depending on driving conditions and road surface conditions, so diagnosis can be difficult. However if a normal DTC is displayed, check the following probable cause. When the problem is still occurring, replace the ABS control module.	- Faulty power source circuit - Faulty wheel speed sensor circuit - Faulty hydraulic circuit for leakage - Faulty HECU

Inspection procedures

DTC Inspection

1. Connect the GDS with the data link connector and turn the ignition switch ON.
2. Verify that the normal code is output.
3. Is the normal code output?

NO	▸ Check the wheel speed sensor circuit.
YES	▸ Erase the DTC and recheck using GDS.

Check the wheel speed sensor circuit

1. Refer to the DTC troubleshooting procedures.
2. Is it normal?

YES	▸ Check the stop lamp switch circuit.
NO	▸ Repair or replace the wheel speed sensor.

Check the stop lamp switch circuit

1. Check that stop lamp lights up when brake pedal is depressed and turns off when brake pedal is released.
2. Measure the voltage between terminal 23 of the ABS control module harness side connector and body ground when brake pedal is depressed.

Specification : approximately B+

3. Is the voltage within specification?

YES	▸ Check the hydraulic circuit for leakage.
NO	▸ Repair the stop lamp switch. Repair an open in the wire between the ABS control module and the stop lamp switch.

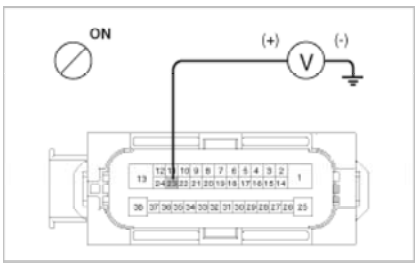

Check the hydraulic circuit for leakage

1. Refer to the hydraulic lines.
2. Inspection leakage of the hydraulic lines.

mcx30.com

YES	▸ The problem is still occurring, replace the ABS control module.
NO	▸ Repair the hydraulic lines for leakage.

Communication with GDS is not possible.
(Communication with any system is not possible)

Detecting condition

Trouble Symptoms	Possible Cause
Possible defect in the power supply system (including ground) for the diagnosis line.	- An open in the wire - Poor ground - Faulty power source circuit

Inspection procedures

Check The Power Supply Circuit For The Diagnosis

1. Measure the voltage between terminal 9 of the data link connector and body ground.

Specification : approximately B+

2. Is voltage within specification?

YES	▸ Check the ground circuit for the diagnosis.
NO	▸ Repair an open in the wire. Check and replace fuse (15A) from the engine compartment junction block.

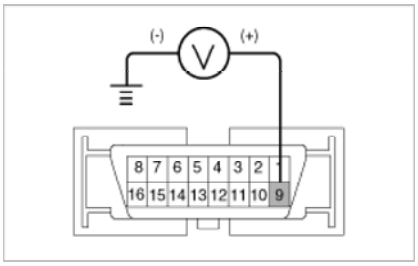

Check the ground circuit for the diagnosis

1. Check for continuity between terminal 5 of the data link connector and body ground.
2. Is there continuity?

NO	▸ Repair an open in the wire between terminal 5 of the data link connector and ground point.

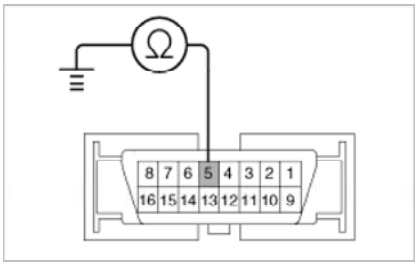

Communication with GDS is not possible.
(Communication with ABS only is not possible)

Detecting condition

Trouble Symptoms	Possible Cause
When communication with GDS is not possible, the cause may be probably an open in the HECU power circuit or an open in the diagnosis output circuit.	- An open in the wire - Faulty HECU - Faulty power source circuit

Inspection procedures

Check for Continuity in the CAN Line

1. Disconnect the connector from the ABS control module.
2. Check for continuity between terminals 26, 14 of the ABS control module connector and 3, 11 of the data link connector.
3. Is there continuity?

mcx30.com

NO	▸ Repair an open in the wire.

Check the power source of ABS control module

1. Disconnect the connector from the ABS control module.
2. Turn the ignition switch ON, measure the voltage between terminal 29 of the ABS control module harness side connector and body ground.

Specification : approximately B+

3. Is voltage within specification?

YES	▸ Check for poor ground.
NO	▸ Check the harness or connector between the fuse (3A) in the engine compartment junction block and the ABS control module.Repair if necessary.

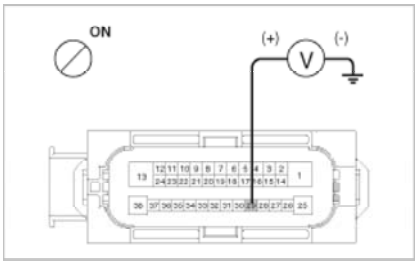

Check for poor ground

1. Check for continuity between terminal 5 of the data link connector and ground point.

YES	▸ Replace the ABS control module and recheck.
NO	▸ Repair an open in the wire or poor ground

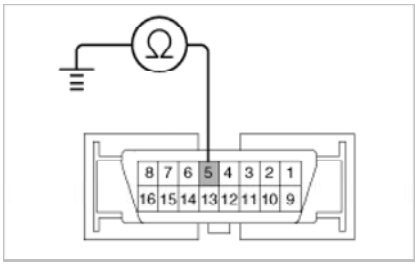

When Ignition Key Is Turned ON (engine OFF), The ABS Warning Lamp Does Not Light Up.

Detecting condition

Trouble Symptoms	Possible Cause
When current flows in the HECU the ABS warning lamp turns from ON to OFF as the initial check. Therefore if the lamp does not light up, the cause may be an open in the lamp power supply circuit, a blown bulb, an open in the both circuits between the ABS warning lamp and the HECU, and the faulty HECU.	- Faulty ABS warning lamp bulb - Blown fuse is related to ABS in the engine compartment junction block - Faulty ABS warning lamp module - Faulty HECU

Inspection procedures

Problem verification

1. Disconnect the connector from the ABS control module and turn the ignition switch ON.
2. Does the ABS warning lamp light up?

YES	▸ Inspect again after replacing the ABS HECU.
NO	▸ Check the power source for the ABS warning lamp.

Check the power source for the ABS warning lamp

1. Disconnect the instrument cluster connector (M15-A) and turn the ignition switch ON.
2. Measure the voltage between terminal (M15-A) 2 of the cluster harness side connector and body ground.

Specification : approximately B+

mcx30.com

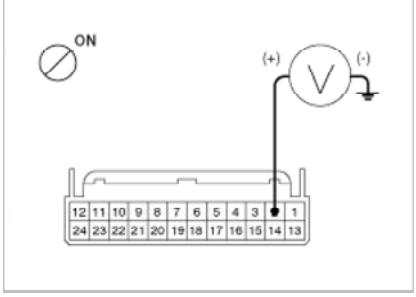

3. Is voltage within specification?

YES	▸ Check the CAN circuit resistance for ABS warning lamp.
NO	▸ Check for blown fuse.

Check the CAN circuit resistance for ABS warning lamp

1. Disconnect the instrument cluster connector (M15-A) and turn the ignition switch OFF.
2. Measure the resistance between terminal (M15-A) 5 and 6 of the cluster harness side connector.

Specification : 60Ω

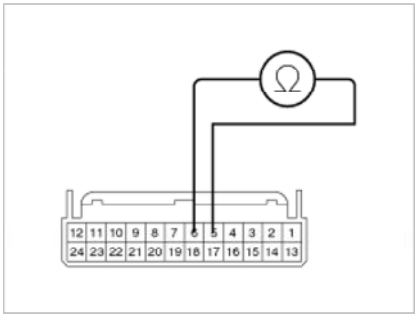

3. Is resistance within specification?

YES	▸ Repair ABS warning lamp bulb or instrument cluster assembly.
NO	▸ Check the CAN circuit wiring for ABS warning lamp.

Check the CAN circuit wiring for ABS warning lamp

1. Disconnect the instrument cluster connector (M15-A) and ABS HECU connector, and then turn the ignition switch OFF.
2. Check for continuity between terminal (M15-A) 5 of the cluster harness side connector and terminal 26 of ABS HECU harness side.
   Check for continuity between terminal (M15-A) 6 of the cluster harness side connector and terminal 14 of ABS HECU harness side.

Specification : Below 1Ω

3. Is resistance within specification?

YES	▸ Repair short of wiring between terminal 26, 14 of ABS HECU harness connector and ABS warning lamp module.
NO	▸ Repair open of wiring between terminal 26, 14 of ABS HECU harness connector and ABS warning lamp module.

Even After The Engine Is Started, The ABS Warning Lamp Remains ON.

Detecting condition

Trouble Symptoms	Possible Cause
If the HECU detects trouble, it lights the ABS warning lamp while at the same time prohibiting ABS control. At this time, the HECU records a DTC in memory. Even though the normal code is output, the ABS warning lamp remains ON, then the cause may be probably an open or short in the ABS warning lamp circuit.	- An open in the wire - Faulty instrument cluster assembly - Faulty ABS warning lamp module - Faulty HECU

Inspection procedures

Check DTC Output

1. Connect the GDS to the 16P data link connector located behind the driver's side kick panel.

mcx30.com

3. Is DTC output?

YES	▸ Perform the DTC troubleshooting procedure (Refer to DTC troubleshooting).
NO	▸ Check the CAN circuit resistance for ABS warning lamp.

Check the CAN circuit resistance for ABS warning lamp

1. Disconnect the instrument cluster connector (M15-A) and turn the ignition switch OFF.
2. Measure the resistance between terminal (M15-A) 5 and 6 of the cluster harness side connector.

Specification : 60Ω

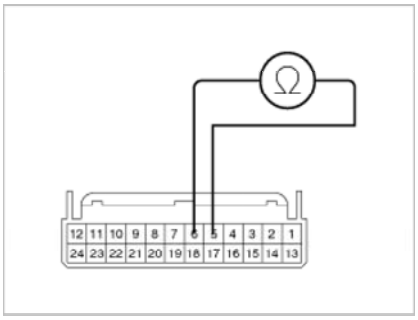

3. Is resistance within specification?

YES	▸ Repair ABS warning lamp bulb or instrument cluster assembly.
NO	▸ Check the CAN circuit wiring for ABS warning lamp.

Check the CAN circuit wiring for ABS warning lamp

1. Disconnect the instrument cluster connector (M15-A) and ABS HECU connector, and then turn the ignition switch OFF.
2. Check for continuity between terminal (M15-A) 5 of the cluster harness side connector and terminal 26 of ABS HECU harness side.
   Check for continuity between terminal (M15-A) 6 of the cluster harness side connector and terminal 14 of ABS HECU harness side.

Specification : Below 1Ω

3. Is there continuity?

YES	▸ Repair short of wiring between terminal 26, 14 of ABS HECU harness connector and ABS warning lamp module.If no trouble in wiring, inspect again after replacing the ABS HECU.
NO	▸ Repair short of wiring between terminal 26, 14 of ABS HECU harness connector and ABS warning lamp module.If no trouble in wiring, inspect again after replacing the ABS HECU.

Bleeding of Brake System

This procedure should be followed to ensure adequate bleeding of air and filling of the ESC unit, brake lines and master cylinder with brake fluid.

1. Remove the reservoir cap and fill the brake reservoir with brake fluid.

> CAUTION
>
> If there is any brake fluid on any painted surface, wash it off immediately.

> NOTE
>
> When pressure bleeding, do not depress the brake pedal.
> Recommended fluid..... DOT3 or DOT4

2. Connect a clear plastic tube to the wheel cylinder bleeder plug and insert the other end of the tube into a half filled clear plastic bottle.
3. Connect the GDS to the data link connector located underneath the dash panel.
4. Select and operate according to the instructions on the GDS screen.

> CAUTION
>
> You must obey the maximum operating time of the ABS motor with the GDS to prevent the motor pump from burning.

(1) Select vehicle name.

(2) Select Anti-Lock Brake system.

(3) Select HCU air bleeding mode.

mcx30.com

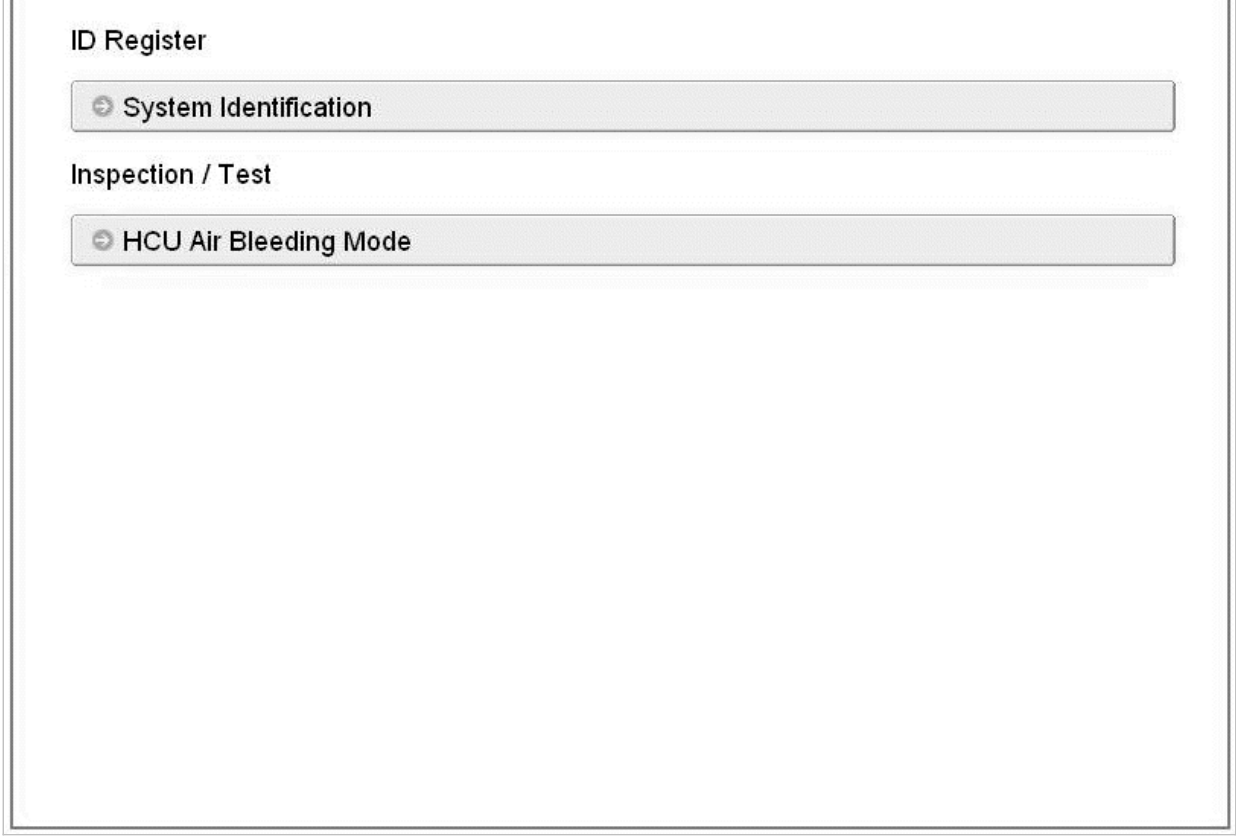

(4) Press "OK" to operate motor pump and solenoid valve.

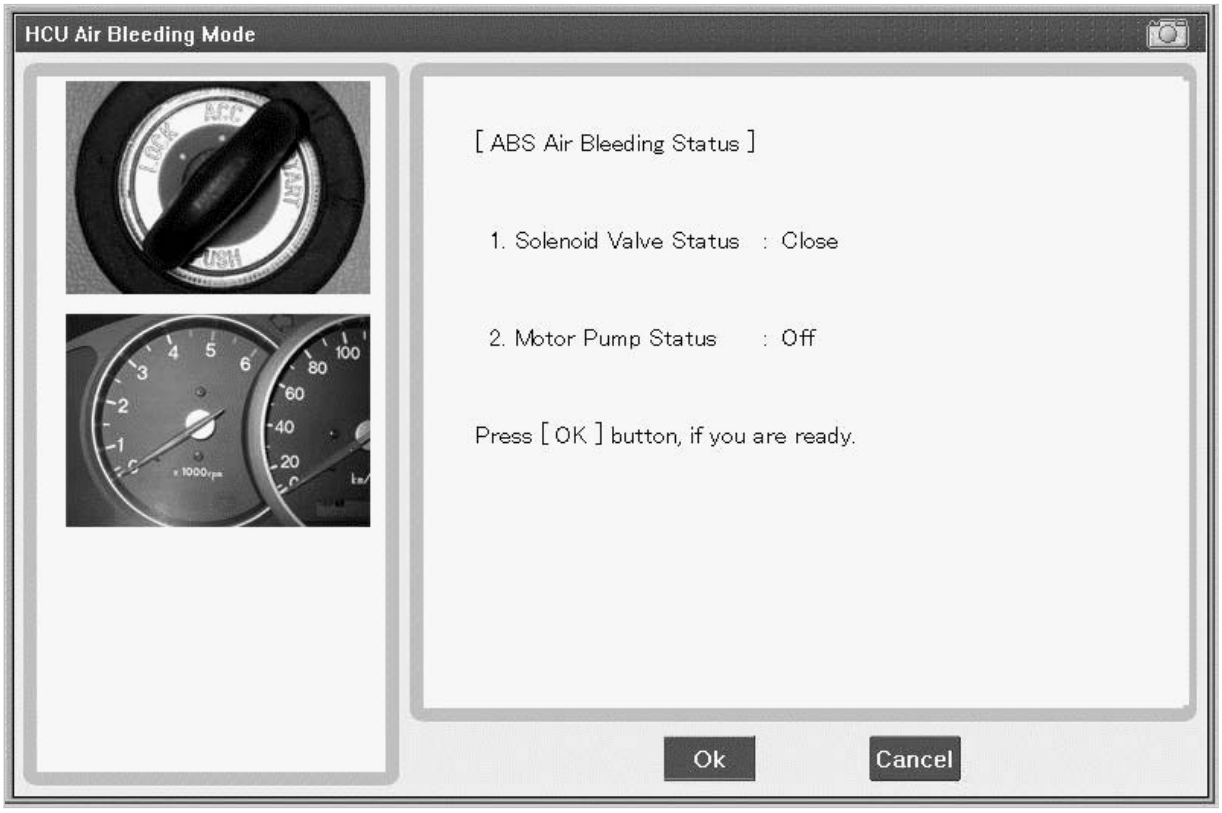

(5) Wait 60 sec. before operating the air bleeding.
(If not, you may damage the motor.)

mcx30.com

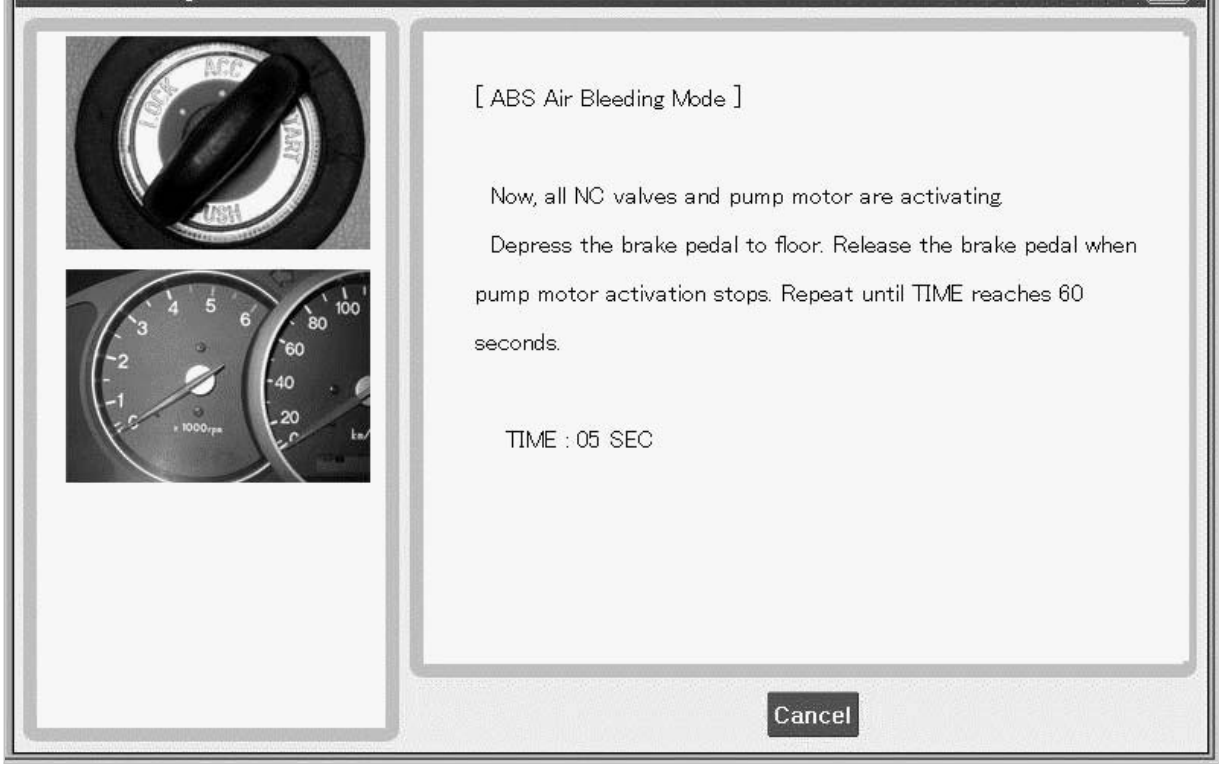

(6) Perform the air bleeding.

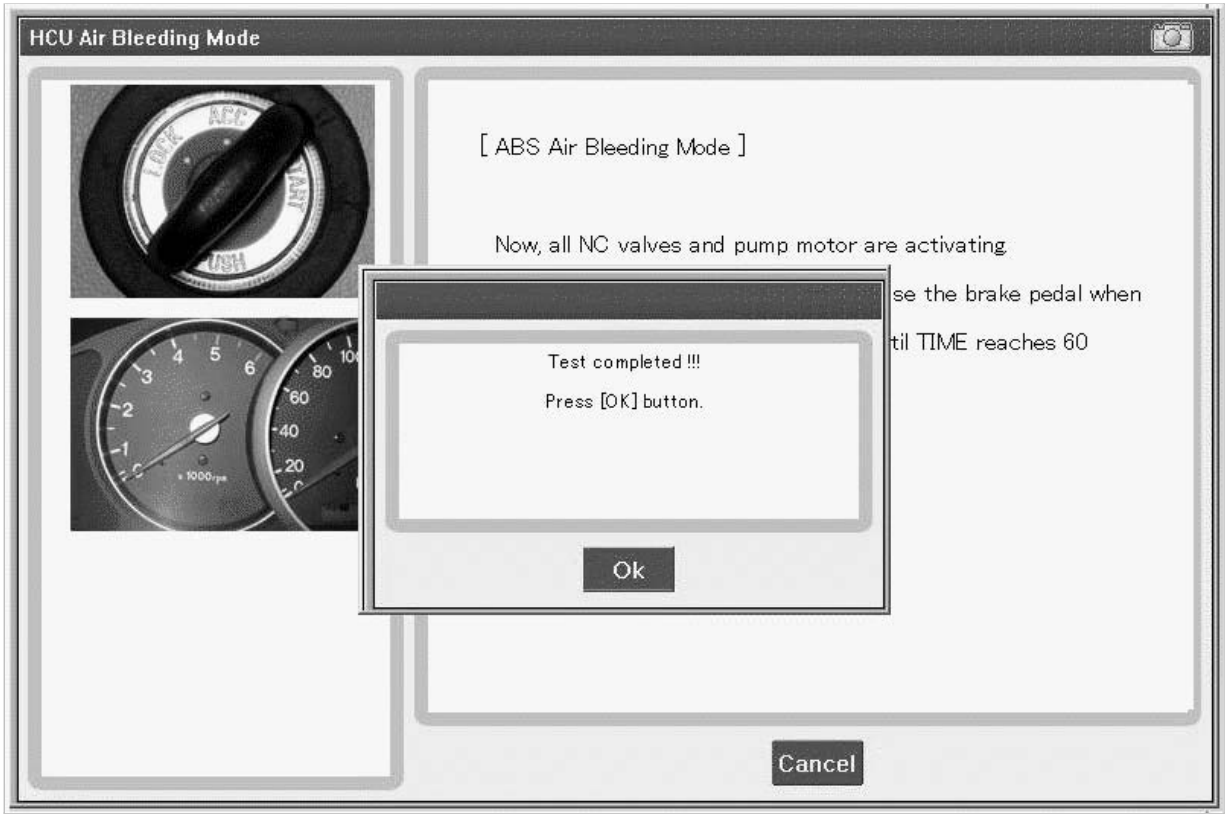

5. Pump the brake pedal several times, and then loosen the bleeder screw until fluid starts to run out without bubbles. Then close the bleeder screw (A).

Front

mcx30.com

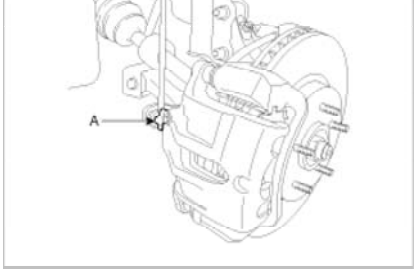

Rear

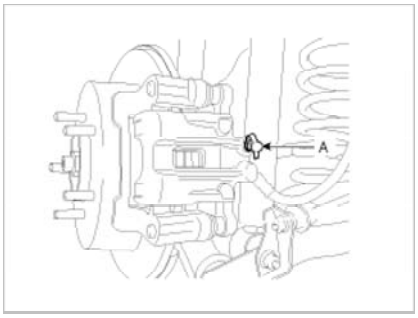

6. Repeat step 5 until there are no more bubbles in the fluid for each wheel.

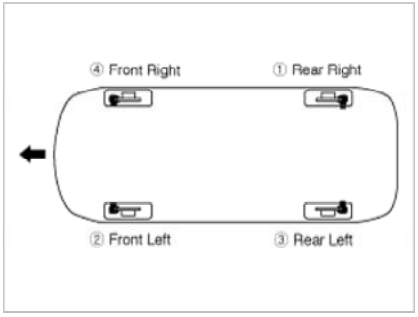

7. Tighten the bleeder screw.

Bleed screw tightening torque:
7 ~ 13 Nm (0.7 ~ 1.3 kgf.m, 5.4 ~ 9.5 lb-ft)

Brake System > ESC(Electronic Stability Control) System > EBD(Electronic Brake-force Distribution) > Description and Operation

Operation

The EBD system (Electronic Brake force Distribution) as a sub-system of the ABS system is to control the maximum braking effectiveness by the rear wheels.
It further utilizes the efficiency of highly developed ABS equipment by controlling the slip of the rear wheels in the partial braking range.
The brake force is moved even closer to the optimum and controlled electronically, thus dispensing with the need for the proportioning valve.
The proportioning valve, because of a mechanical device, has limitations to achieve an ideal brake force distribution to the rear wheels as well as to carry out the flexible brake force distribution proportioning to the vehicle load or weight increasing. And in the event of malfunctioning, driver cannot notice whether it fails or not.
EBD controlled by the ABS Control Module, calculates the slip ratio of each wheel at all times and controls the brake pressure of the rear wheels not to exceed that of the front wheels.
If the EBD fails, the EBD warning lamp (Parking brake lamp) lights up.

Advantages

- Function improvement of the base-brake system.
- Compensation for the different friction coefficients.
- Elimination of the proportioning valve.
- Failure recognition by the warning lamp.

Comparison between Proportioning Valve and EBD

mcx30.com

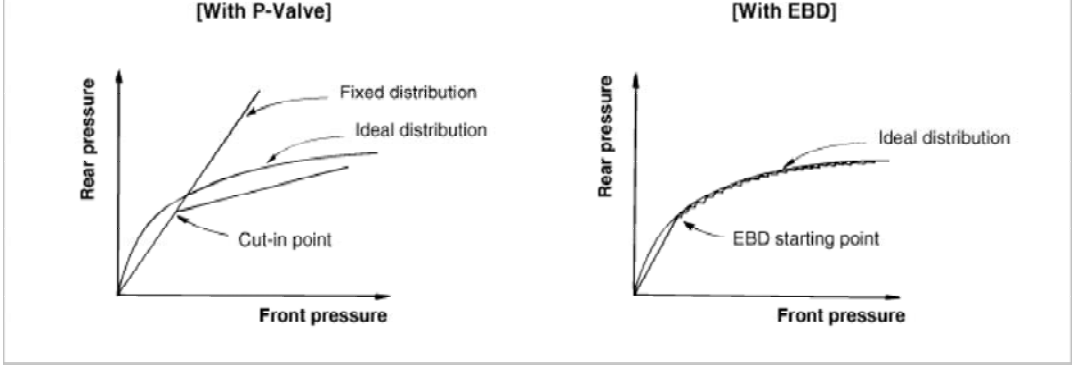

Brake System > ESC(Electronic Stability Control) System > ESC Control Module > Components and Components Location

Components

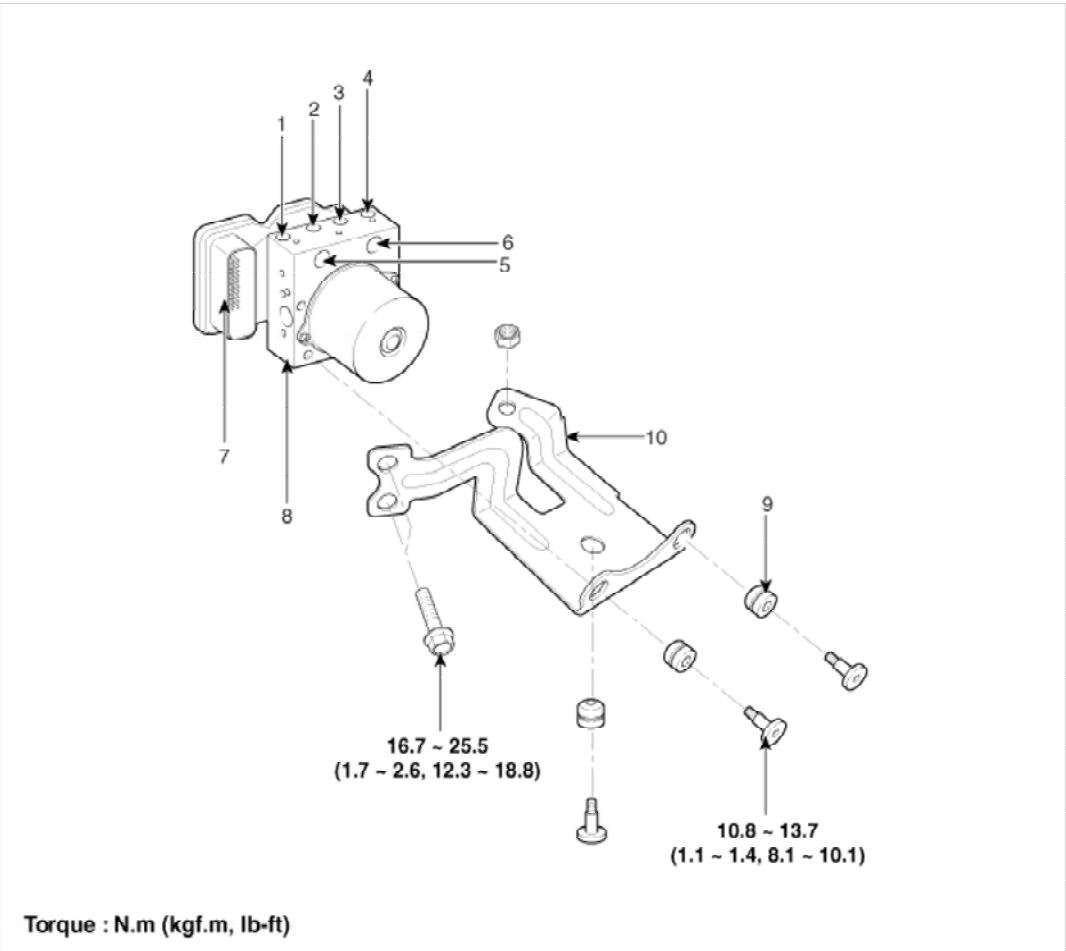

1. Front - left tube	6. MC1
2. Rear - right tube	7. ESC control module connector
3. Rear - left tube	8. ESC control module(HECU)
4. Front - right tube	9. Damper
5. MC2	10. Bracket

Brake System > ESC(Electronic Stability Control) System > ESC Control Module > Repair procedures

Removal

1. Turn the ignition switch OFF.
2. Disconnect the brake tubes from the HECU by unlocking the nuts counterclockwise with a spanner.

Tightening torque :

mcx30.com

3. Pull up the lock of the ESC control unit connector , then disconnect the connector.

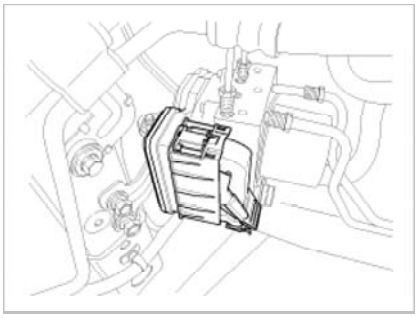

4. Loosen the ESC HECU bracket bolts (A) and nut (B), then remove HECU and bracket.

Tightening torque :
16.7 ~ 25.5N.m(1.7 ~ 2.6kgf.m, 12.3 ~ 18.8lb-ft)

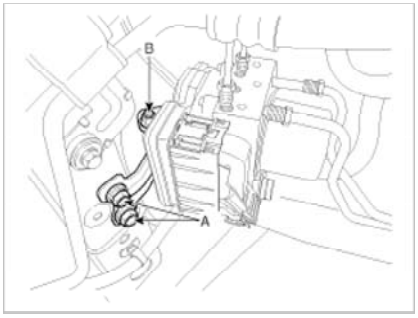

CAUTION

1. Never attempt to disassemble the HECU.
2. The HECU must be transported and stored in.
3. Never shock to the HECU.

5. Remove the 3 bolts, then remove the bracket from HECU.

Tightening torque :
10.8 ~ 13.7N.m(1.1 ~ 1.4kgf.m, 8.0 ~ 10.1lb-ft)

Installation

1. Installation is the reverse of removal.
2. Tighten the HECU mounting bolts and nuts to the specified torque.
3. After installation, bleed the brake system.(Refer to ABS bleeding)

Variant coding

2WD and 4WD vehicle are sharing the HECU each other. To apply appropriate vehicle, HECU needs to variant coding process.
Variant coding process is necessary when :
- HECU is replaced.
- C1702 DTC(variant coding error) code is detected.

Brake System > ESC(Electronic Stability Control) System > Front Wheel Speed Sensor > Components and Components Location

Components

mcx30.com

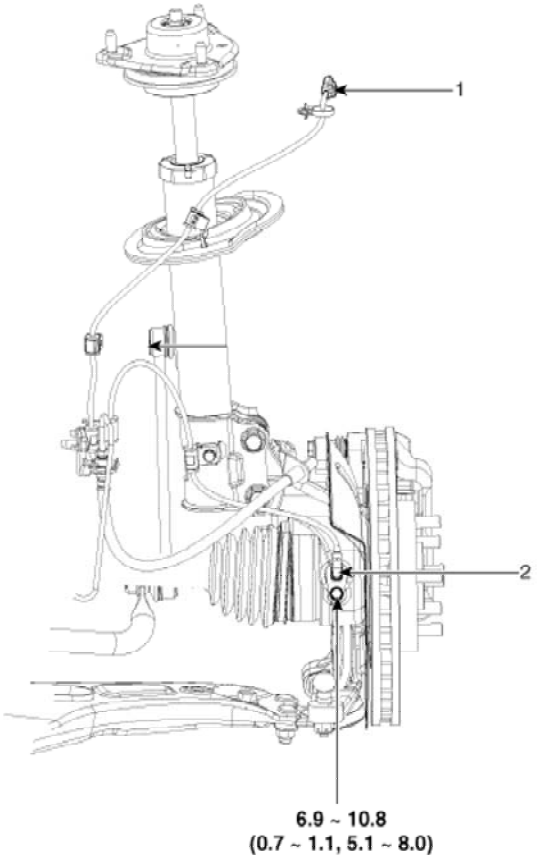

Torque : N.m (kgf.m, lb-ft)

1. Front wheel speed sensor connector
2. Front wheel speed sensor

Brake System > ESC(Electronic Stability Control) System > Front Wheel Speed Sensor > Repair procedures

Removal

1. Remove the front wheel speed sensor mounting bolt (A).

Tightening torque:
6.9 ~ 10.8 N.m (0.7 ~ 1.1 kgf.m, 5.1 ~ 8.0 lb-ft)

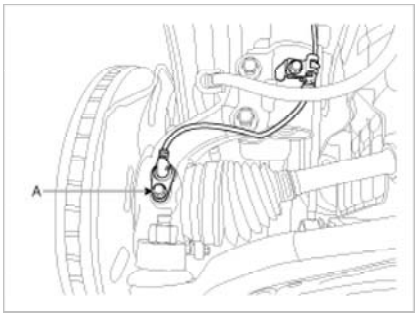

2. Remove the front wheel guard .
3. Disconnect the front wheel speed sensor connector, then remove the front wheel speed sensor.
4. Installation is the reverse of removal.

Inspection

1. Measure the output voltage between the terminal of the wheel speed sensor and the body ground.

mcx30.com

In order to protect the wheel speed sensor, when measuring output voltage, a 100 Ω resister must be used as shown.

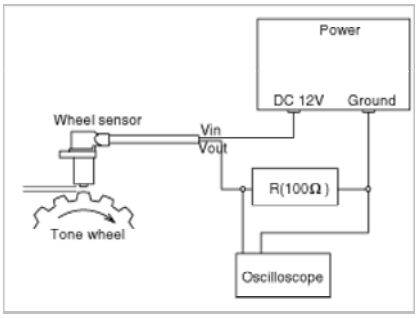

2. Compare the change of the output voltage of the wheel speed sensor to the normal change of the output voltage as shown below.

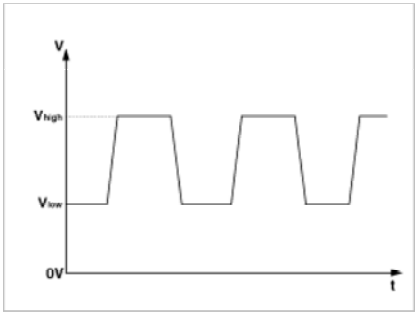

V_low : 0.59V ~ 0.84V
V_high : 1.18V ~ 1.68V
Frequency range : 1 ~ 2,500Hz

Brake System > ESC(Electronic Stability Control) System > Rear Wheel Speed Sensor > Components and Components Location

Components

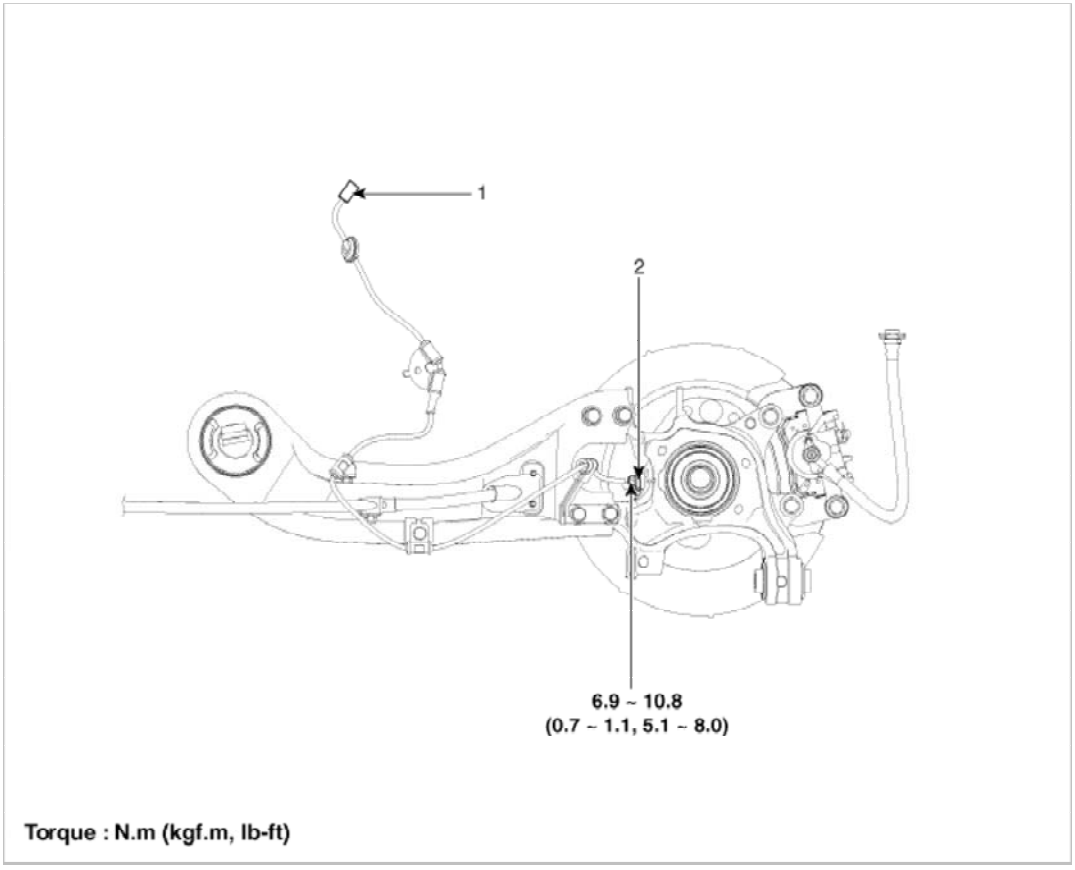

mcx30.com

2. Rear wheel speed sensor

Brake System > ESC(Electronic Stability Control) System > Rear Wheel Speed Sensor > Repair procedures

Removal

1. Remove the rear wheel speed sensor mounting bolt (A).

Tightening torque:
6.9 ~ 10.8 N.m (0.7 ~ 1.1 kgf.m, 5.1 ~ 8.0 lb-ft)

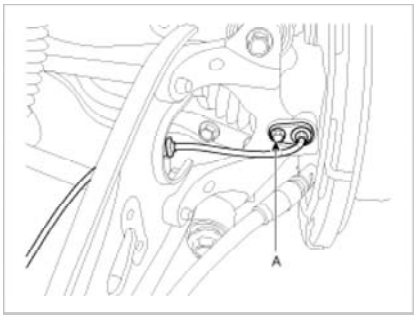

2. Remove the luggage side trim the disconnect the rear wheel speed sensor connector.
3. Installation is the reverse of removal.

Inspection

1. Measure the output voltage between the terminal of the wheel speed sensor and the body ground.

CAUTION

In order to protect the wheel speed sensor, when measuring output voltage, a 100 Ω resister must be used as shown.

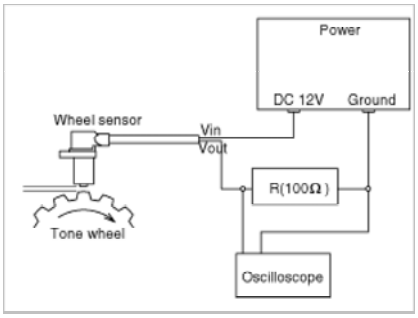

2. Compare the change of the output voltage of the wheel speed sensor to the normal change of the output voltage as shown below.

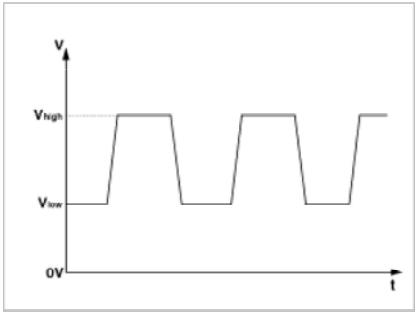

V_low : 0.59V ~ 0.84V
V_high : 1.18V ~ 1.68V
Frequency range : 1 ~ 2,500Hz

Brake System > ESC(Electronic Stability Control) System > Yaw-rate and Lateral G Sensor > Description and Operation

Description

When the vehicle is turning with respect to a vertical axis the yaw rate sensor detects the yaw rate electroniclly by the vibration change of plate fork inside the yaw rate sensor.

mcx30.com

Direction and magnitude of lateral G loaded to vehicle can be known with electrostatic capacity changing according to lateral G.

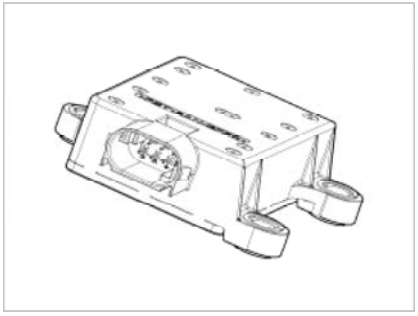

Specifications

Description		Specification	Remarks
Operating voltage		10 ~ 16V	
Output signal		CAN Interface	
Operating temperature		-40 ~ 85°C (-40 ~ 185°F)	
Yaw-rate sensor	Measurement range	-75 ~ 75°/sec	
	Frequency response	15 ~ 45Hz	
Lateral G sensor	Measurement range	-1.5 ~ +1.5g	
	Frequency response	50Hz ± 60% (-3dB)	

External Diagram

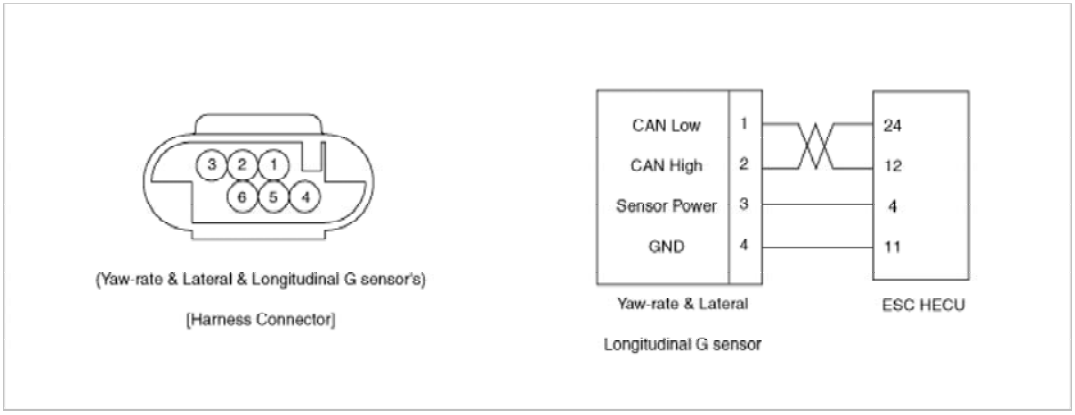

Brake System > ESC(Electronic Stability Control) System > Yaw-rate and Lateral G Sensor > Repair procedures

Removal

1. Turn ignition switch OFF and disconnect the negative (-) battery cable.
2. Remove the floor console.
3. Disconnect the yaw rate & lateral & Longitudinal G sensor connector (A).

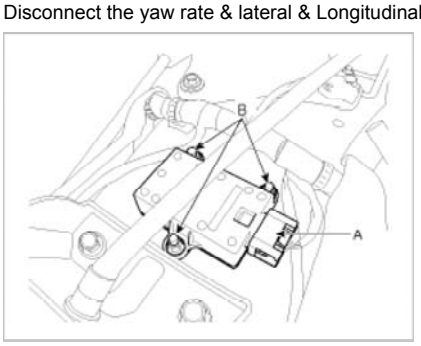

4. Remove the mounting bolts (B).

Tightening torque:
7.9 ~ 10.8 N.m (0.8 ~ 1.1 kgf.m, 5.8 ~ 8.0 lb-ft)

5. Installation is the reverse of removal.

mcx30.com

Brake System > ESC(Electronic Stability Control) System > ESC OFF Switch > Description and Operation

Description

1. The ESC OFF switch is for the user to turn off the ESC system.
2. The ESC OFF lamp is on when ESC OFF switch is engaged.

Brake System > ESC(Electronic Stability Control) System > ESC OFF Switch > Repair procedures

Inspection

1. Turn ignition switch OFF and disconnect the negative (-) battery cable.
2. Remove the crash pad side switch assembly.

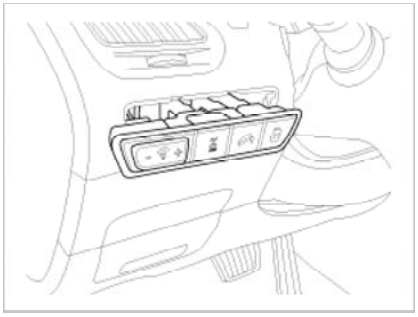

3. Check the continuity between the switch terminals as the ESC OFF switch is engaged.

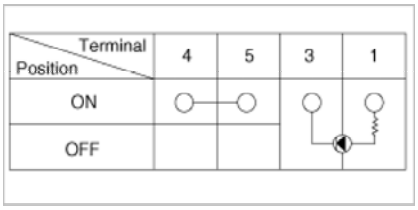

Brake System > ESC(Electronic Stability Control) System > DBC Switch > Description and Operation

Description

The DBC function is the acronym word of Downhill Brake Control function. When a vehicle goes down the hill, just pushing the DBC switch enables the car to keep its vehicle's speed at a constant value without operating the brake pedal. The DBC function is operated when the vehicle is on the decline and its velocity is under the predetermined speed.

Brake System > ESC(Electronic Stability Control) System > DBC Switch > Repair procedures

Inspection

1. Turn ignition switch OFF and disconnect the negative (-) battery cable.
2. Remove the crash pad side switch assembly.

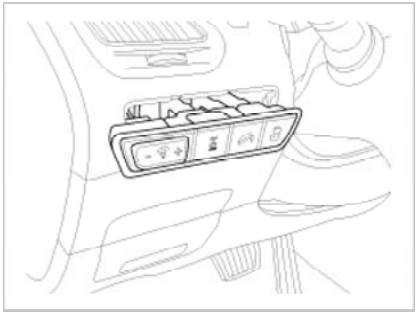

3. Check the continuity between the switch terminals as the DBC switch is engaged.

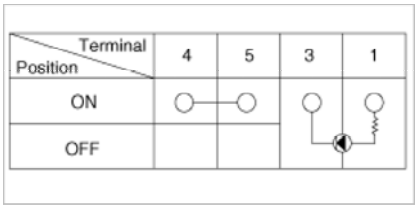

mcx30.com

Operation

Description

The Steering Angle Sensor (SAS) is installed in EPS (Electric Power Steering) and it sends messages to HECU through CAN communication line.
The SAS is used to determine turning direction and speed of the steering wheel.
The HECU uses the signals from the SAS when performing ESP-related calculations.
Components (Steering Angle Sensor, Torque Sensor, Failsafe relay, etc.) of the EPS system are located inside the steering column & EPS unit assembly and the steering column & EPS unit assembly must not be disassemble to inspect or replace them. (Refer to “ST (Steering system) Gr.”)

mcx30.com